# SERENITY
# AND
# LIBERO

# OWNER'S MANUAL

# Triple E
# Recreational Vehicles

301 Roblin Blvd, Box 1230
Winkler, MB, Canada  R6W 4C4
Tel: (204) 325-4361
Fax: (204) 325-5241
info@tripleerv.com

## NOTE

Production improvement is a continuing process at Triple E Recreational Vehicles. Thus, we reserve the right to change specifications, operating instructions, standards and options on any and all products without prior notice. Errors and omissions excepted. The diagrams included were current at the time of printing.

**PRINTED IN CANADA**
**ISSUE DATE: NOVEMBER 2010**

**PART NUMBER:**
**146-4593-DEC10**

Printed NOVEMBER 2010

# TRIPLE E RECREATIONAL VEHICLES & LEISURE TRAVEL VANS
# WARRANTY POLICY

(Effective October 1, 2010)

## 1. BASIC COVERAGE

**A. Coach Warranty:**

**TWO YEAR LIMITED COACH WARRANTY** - Triple E Recreational Vehicles (hereafter known as Triple E RV) warrants that all parts manufactured by Triple E RV to be free from defects in material and workmanship for a period of twenty four (24) months or 24,000 miles/40,000 kilometers, whichever occurs first, after the date of purchase by the original retail purchaser from an authorized dealer. Obligation under this warranty shall be limited to making good at our factory, any part or parts thereof upon return to the factory. The odometer accumulation on a vehicle driven from Triple E Recreational Vehicles to the dealership will be added to the odometer warranty allowance. The remainder for the coach warranty is transferable to a second owner upon written request to Triple E RV within 30 days of the coach resale date.

**B. Structural Warranty:**

**THREE YEAR LIMITED STRUCTURAL WARRANTY** - Triple E RV warrants to the first retail purchaser from an authorized dealer that the structural components of the Triple E RV designed and fabricated part of our product will be free of substantial structural defects in material and workmanship for a period for 36 months after the date of purchase by the original retail purchaser from an authorized dealer. This is limited to, making good at our factory, any part or parts thereof upon return to the factory. This warranty applies provided that all applicable sections of this warranty policy are met.

"Structural components" shall include the main steel frame and all steel members welded to it, the studs and framing in the walls, the roof rafters and the fiberglass unibody (Serenity & Libero). All other items are covered by the coach warranty. On motor homes and vans where the chassis or van is designed and built by one of our suppliers, a separate warranty is provided by the chassis manufacturer and is the only warranty available for the chassis and the components that they provide. Triple E RV warrants our connections to their chassis.

**C. Component Warranty:**

TRIPLE E RV partners with suppliers to provide components for our products. Each of these suppliers offers warranty (and in some cases warranty extensions) for their components that are separate from any warranty offered by the Triple E RV limited warranty and constitutes the only warranty for these components It is the retail customers responsibility to complete and mail the warranty registration cards supplied by these companies to be eligible for available warranty. These cards can be found in the owner's packet in the unit. Contact information for many of our component suppliers is listed in Attachment A.

**D. Chassis Warranty:**

Chassis and all components supplied on the chassis as we receive it are covered under separate warranty by the original chassis manufacturer, i.e. Ford, Freightliner, General Motors, Mercedes-Benz. Triple E RV is responsible for certain modifications made to the chassis that are required to adapt our floor plans to the chassis. Please contact us for details about our responsibilities before beginning repairs.

## 2. WHAT IS NOT COVERED

This warranty will not apply where a motor home or trailer has been altered outside our factory in any way so as to, in our judgement, affect its stability or reliability, or which has been subject to misuse, negligence or accident. The warranty will not apply if the unit has been in a rental pool.

Any loss resulting from abuse or misuse, failure to properly winterize, failure to have regular ser-

vicing performed, such as user maintenance, adjustments, tune-ups, alignments, road service, failure to protect the motorhome from further damage if an indication of damage occurred, failure caused by overheating (regardless of cause), contamination of lubricants, coolants including failure of hoses, connections and lines is not covered. It is the responsibility of the owner to operate and maintain the motorhome or trailer as recommended in the owner's manual. Regular scheduled maintenance is essential.

We may restrict the warranty on your unit if it is not properly maintained, or is abused, and if the neglect or abuse interferes with the proper functioning of the RV. All Triple E RV products are NOT intended for occupation during extremely cold weather. Damage caused by such use is NOT covered by warranty. If the warranty is restricted, coverage may be denied or subject to our approval before repairs are performed.

Those damages incurred by collision, upset, fire, theft, explosion, missiles, breakage of glass, earthquakes, vandalism, civil commotion, acts of God, lightning, malicious mischief, water, flood, rust, hail, larceny, freezing, corrosion, condensation, mold, smoke, or nuclear contamination, losses to any property or injury and/or death to any persons regardless if the damage or injury was caused by your vehicle or its parts are not warranted by the manufacturer.

This warranty does not cover any component which is not manufactured by Triple E Recreational Vehicles or any component under separate warranties from its manufacturer (including but not limited to tires, batteries, refrigerator, stove, heaters, chassis, powertrain, etc for example). Triple E Recreational Vehicles shall not be held responsible or liable in any manner with respect to these components.

Items such as sealant, trims, fabrics, floor coverings, upholstery, drapery, blinds, paint, gelcoat, and decals may experience normal pigmentation change and deterioration of material from use or weather. This is considered normal and is not covered by warranty.

Consequential damages such as loss of your vehicle, loss of time, inconvenience, expense for fuel, transportation to and from the dealer or the manufacturing plant location, bus, taxi or air fares, telephone, travel, rental vehicle, overnight accommodation, loss or damage to your personal property, commercial loss, loss of income, loss of use, or other incidental or consequential damages or expenses are not warranted by the manufacturer.

**Note:** Some States and Provinces do not allow the exclusion or limitation of incidental or consequential damages, thus the limitation in the paragraph above may not apply to you

## 3. OTHER NOTES REGARDING WARRANTY

This warranty is expressly in lieu of all other warranties expressed or implied and all other obligations or liabilities on our part of any kind of character, including liabilities for alleged representation or negligence. We neither assume nor authorize any other person to assume for us any liability in the connection with the sale of our product other than expressed herein. We shall not be responsible for commercial loss, special or consequential damages resulting from breach of these written warranties, or any implied warranty or condition.

All correspondence should be directed to the Dealer from whom the product was purchased and must specify the serial number and date of purchase of the product in question.

This warranty is not valid unless the warranty registration has been completed at the time of purchase.

This warranty is the only express warranty made by us applicable to this motorhome or trailer. Any implied warranty or condition or condition of merchantability or fitness for a particular purpose applicable to this product is limited in duration to the duration of this warranty.

The limited two year coach warranty shall not be considered as part of the separate structural warranty provided with the recreational vehicle and shall terminate on the second year anniversary date of the first retail purchase.

This warranty is applicable to units sold and used in Canada and the United States. Warranty is not available for units sold or exported outside of Canada and the United States.

It may become necessary for you (the retail owner) to have warranty work done at a site other than an authorized Triple E RV/Leisure Travel Van Dealer. If this is the case the repair center must obtain prior authorization from Triple E Recreational Vehicles before the warranty work can begin to ensure warranty coverage is available and that the facility is qualified to do such repair work. The repair center must call the Triple E RV Warranty Dept at our Toll Free number 1-877-992-9906 for authorization before beginning repairs.

**Tow Vehicle Disclaimer:**

Triple E RV customers using our towable product are solely responsible for the selection and proper use of tow vehicles. All customers should consult with a motor vehicle manufacturer or dealer concerning the purchase and use of suitable tow vehicles for our products. Triple E RV further disclaims any liability with respect to damages which may be incurred by an owner of our towable product as a result of the operation, use or misuse of a tow vehicle.

Triple E RV's warranties do not cover damage to the recreational vehicle or tow vehicle as a result of the operation, use or misuse of the tow vehicle.

**Note:** Product improvement is an ongoing process at Triple E RV. Thus we reserve the right to change specification, operating instructions, standards and options on any and all products without prior notice. Errors and Omissions excepted.

**Attachment A – Component Supplier Listing**

The warranty for all components supplied to us for our product are extended through the specific component manufacturer only. Consult your Owner's package for details and claim procedures for the warranties on these components as they do differ between suppliers and are subject to change without prior notification. The terms of these are as specified in each of the specific manufacturer's brochures.

In cases where the component supplier unfairly disputes your claim or you believe that your claim has been treated unfairly, contact the Triple E RV warranty department and we will assist you in presenting your information to our supplier for reconsideration. This assistance is provided as a service only on your behalf and shall not indemnify Triple E RV.

Triple E will not provide a free warranty replacement or credit for defective product if the component supplier in question has suspended operations or become insolvent. If this rare situation were to occur, Triple E will offer a suitable substitute alternative product at a preferred price. Please note that the replacement part may require reconfiguration to fit into the specific vehicle. Triple E can not be held responsible for these reconfiguration costs.

In some cases the remainder of the major component warranties may be transferable to a second owner. It is the second owner's responsibility to contact these suppliers to apply for this warranty transfer.

# TABLE OF CONTENTS


| SECTION | DESCRIPTION | PAGE |
|---|---|---|
| **1** | **Introduction** | **1-1** |
| 1.1 | Operator's Manuals | 1-1 |
| 1.2 | Information Kit | 1-1 |
| 1.3 | Options and Equipment | 1-1 |
| 1.4 | Vehicle Certification Label | 1-3 |
| 1.5 | Exterior Feature Identification | 1-5 |
| 1.6 | Service Assistance | 1-6 |
| 1.7 | Reporting Safety Defects | 1-6 |
| 1.7.1 | Coach Specifications | 1-6 |
| **2** | **Safety** | **2-1** |
| 2.1 | General Safety | 2-1 |
| 2.2 | Alarms | 2-2 |
| 2.2.1 | LP Gas Alarm | 2-2 |
| 2.2.2 | Carbon Monoxide/Smoke Alarm | 2-3 |
| 2.3 | Fire Prevention | 2-4 |
| 2.3.1 | Fire Safety Tips | 2-4 |
| 2.3.2 | Fire Extinguisher | 2-4 |
| 2.4 | Emergency Escape | 2-4 |
| **3** | **Vehicle Operation** | **3-1** |
| 3.1 | Vehicle Preparation | 3-1 |
| 3.1.1 | Keys | 3-1 |
| 3.1.2 | Vehicle Loading | 3-1 |
| 3.1.3 | Trailer Towing | 3-2 |
| 3.1.4 | Auxiliary Vehicle Towing | 3-2 |
| 3.1.5 | Outside Storage | 3-2 |
| 3.1.6 | Pre-Trip Inspection | 3-3 |
| 3.1.7 | Emergency Equipment Checklist | 3-4 |
| 3.1.8 | Final Checks | 3-4 |
| 3.1.9 | Maximum Occupancy | 3-4 |
| 3.1.10 | Rear Air Suspension | 3-4 |
| 3.2 | Seating/Sleeping | 3-5 |
| 3.2.1 | Front Dinette | 3-5 |
| 3.2.2 | Electric Rear Sofa | 3-6 |
| 3.2.3 | Seat/Shoulder Belts | 3-7 |
| 3.2.4 | Driver/Passenger Seat Controls | 3-8 |
| 3.2.5 | Driver/Passenger | |
| 3.3 | Travelling | 3-10 |
| 3.3.1 | Driving Characteristics | 3-10 |
| 3.3.2 | Driving Safety Tips | 3-10 |
| 3.3.3 | Travel Tips | 3-11 |
| 3.3.4 | Parking | 3-12 |
| 3.3.5 | Levelling | 3-12 |
| 3.3.6 | Extended Use | 3-12 |
| 3.4 | Emergencies While Driving | 3-13 |
| 3.4.1 | Hazard Warning Lights | 3-13 |
| 3.4.2 | Flat Tire | 3-13 |
| 3.4.3 | When Vehicle is Disabled | 3-14 |
| 3.4.4 | Overheating | 3-14 |
| 3.4.5 | Severe Weather Information | 3-15 |
| **4** | **Appliances and Equipment** | **4-1** |
| 4.1 | Refrigerator | 4-1 |
| 4.1.1 | Operating Instructions | 4-1 |
| 4.1.2 | Shutting Down | 4-1 |
| 4.1.3 | Operating Tips | 4-1 |
| 4.1.4 | Exterior Refrigerator Compartment | 4-2 |
| 4.2 | Range | 4-2 |
| 4.2.1 | Lighting Burners | 4-2 |
| 4.2.2 | Safety Tips | 4-2 |
| 4.3 | Microwave | 4-3 |
| 4.5 | Electric Side Entry Door Step | 4-3 |
| 4.6 | LP Gas Furnace | 4-4 |
| 4.7 | Roof Air Conditioner w/ Heat Strip | 4-5 |
| 4.7.1 | Cooling | 4-5 |
| 4.7.2 | Heatstrip / Heat Pump | 4-5 |
| 4.7.3 | Maintenance | 4-5 |
| 4.8 | Power Roof Vent | 4-6 |
| 4.9 | Winegard Antenna | 4-7 |
| 4.9.1 | Cable Hookup | 4-7 |
| 4.9.2 | Antenna Operation | 4-7 |
| 4.10 | TV/DVD | 4-8 |
| 4.10.1 | TV Operation | 4.8 |
| 4.10.2 | DVD Operation | 4.8 |
| **5** | **Awning** | **5-1** |
| 5.1 | Awning Operation | 5-1 |


Printed NOVEMBER 2010

# TABLE OF CONTENTS


| SECTION | DESCRIPTION | PAGE |
|---|---|---|
| **6** | **Electrical Systems** | **6-1** |
| 6.1 | System Monitor | 6-1 |
| 6.2 | Interior Coach Light Switches | 6-2 |
| 6.3 | Converter | 6-2 |
| 6.3.1 | Converter Maintenance | 6-2 |
| 6.4 | 120-Volt AC System | 6-2 |
| 6.4.1 | External Power Cord | 6-2 |
| 6.4.2 | 120-Volt Circuit Breakers | 6-3 |
| 6.4.3 | Ground Fault Circuit Interupter | 6-3 |
| 6.5 | Auxiliary Generator | 6-4 |
| 6.5.1 | Generator Operation | 6-4 |
| 6.5.2 | Generator Safety | 6-4 |
| 6.6 | Automatic Power Transfer Switch | 6-5 |
| 6.7 | 12-Volt DV System | 6-5 |
| 6.7.1 | Automotive Battery | 6-5 |
| 6.7.2 | Coach Battery | 6-5 |
| 6.7.3 | Battery Condition Meter | 6-5 |
| 6.7.4 | Battery Maintenance | 6-6 |
| 6.7.5 | 12-Volt Coach Fuses | 6-7 |
| 6.7.6 | 12-Volt Chassis Fuses | 6-7 |
| 6.8 | Electrical Schematics | 6-8 |
| **7** | **Water/Plumbing System** | **7-1** |
| 7.1 | Fresh Water System | 7-1 |
| 7.1.1 | External Water Supply | 7-1 |
| 7.1.2 | Fresh Water Tank Filling | 7-2 |
| 7.1.3 | Water Pump | 7-2 |
| 7.1.4 | Water Pump Switch | 7-2 |
| 7.1.5 | Fresh Water System Drain | 7-2 |
| 7.1.6 | Water Pump Initial Startup | 7-3 |
| 7.1.7 | Water Pump Troubleshooting | 7-3 |
| 7.1.8 | Disinfection of Water Tank | 7-3 |
| 7.2 | Waste Systems | 7-4 |
| 7.2.1 | Grey Water - Waste Tank | 7-4 |
| 7.2.2 | Black Water - Waste Tank | 7-4 |
| 7.2.3 | Dumping Holding Tanks | 7-4 |
| 7.2.4 | Do's and Don'ts - Holding Tanks | 7-5 |
| 7.2.5 | Using On-Site Sewer Hookups | 7-5 |
| 7.2.6 | Holding Tank Level Indicators | 7-5 |
| 7.3 | Water Heater | 7-6 |
| 7.3.1 | Water Heater Operation | 7-6 |
| 7.3.2 | Water Heater Bypass | 7-7 |
| 7.4 | Water Fixtures | 7-8 |
| 7.4.1 | Fresh Water Toilet | 7-8 |
| 7.4.2 | Interior Shower | 7-9 |
| 7.4.3 | Exterior Shower | 7-9 |
| 7.5 | Plumbing System Schematic | 7-10 |
| **8** | **Liquid Propane Gas System** | **8-1** |
| 8.1 | LP Valve Control Switch | 8-1 |
| 8.2 | Safe Use of LP Gas | 8-1 |
| 8.3 | Selecting Fuel Types | 8-1 |
| 8.4 | How LP Gas Works | 8-1 |
| 8.5 | LP Tank System | 8-2 |
| 8.6 | Refilling LP Tank | 8-2 |
| 8.7 | Air in the LP Tank | 8-3 |
| 8.8 | Travelling LP Gas | 8-3 |
| 8.9 | Regulator | 8.3 |
| 8.10 | LP Gas Leaks | 8-4 |
| 8.11 | Asphyxiation | 8-4 |
| **9** | **Motorhome Maintenance** | **9-1** |
| 9.1 | Exterior Care & Maintenance | 9-1 |
| 9.2 | Interior Care | 9-2 |
| **10** | **Storage & Winterization** | **10-1** |
| 10.1 | Storage Checklist | 10-1 |
| 10.2 | Cold Temperature Storage | 10-1 |
| 10.2.1 | Water System Winterization | 10-1 |
| 10.2.2 | De-Winterize Water Systems | 10-2 |
| 10.2.3 | Spring Startup | 10-2 |
| 10.3 | Cold Temperature Operation | 10-2 |
| 10.3.1 | Chassis | 10-2 |
| 10.3.2 | LP Gas | 10-2 |
| 10.3.3 | Waste System | 10-2 |
| **11** | **Index** | **11-1** |
| **Appendix A: Component Suppliers** | | **A-1** |


Printed NOVEMBER 2010

# 1. INTRODUCTION

Congratulations on your choice of a Leisure Travel Vans Motorhome for your travelling and touring comfort and enjoyment. It utilizes the latest design features and manufacturing techniques to insure safe, efficient and trouble-free operation at all times.

## 1.1 OPERATOR'S MANUALS

All owners/operators should read, understand and follow all instructions in this the motorhome manual, chassis manual and manuals for all auxiliary systems and appliances. A few minutes spent reading the appropriate manual will pay rich dividends in providing safe, efficient and trouble-free operation. Refer to the chassis manufacturer's operator's Manual for detailed information on the chassis. Refer to the appropriate manual supplied for auxiliary equipment and appliances as required.

This manual covers all the systems, controls and operation unique to this vehicle. Always keep the information kit of manuals and information with the vehicle for easy reference. Pass the kit on to new operators or owners as appropriate for their information as well. Use the Table of Contents or Index to find specific information.

If more information is required or you do not understand something, please contact:

Your Leisure Travel Vans dealer

or

Triple E Recreational Vehicles
Box 1230, 301 Roblin Blvd.
Winkler, MB CANADA
R6W 4C4

USA Mailing Address:
Box 68
Walhalla, ND 58282

Toll Free: 877-992-9906
Tel: (204) 325-4361
Fax: (204) 325-5241
email: info@tripleerv.com

## 1.2 INFORMATION KIT

A black information binder is provided with each vehicle and includes information on specific systems, features and appliances. Important information will be found in the binder for:

1. Fridge
2. Cook tops
3. Furnace
4. Electrical Panel
5. Toilet
6. Water Heater
7. Water Pump
8. Vent (roof)
9. Fire Extinguisher
10. Battery isolator
11. Rear Battery
12. Smoke Detector
13. Thermostate
14. CO Detector
15. Propane Detector
16. Gas Regulator
17. Winegard Crank up Antenna
18. TV/DVD
19. Microwave

**IMPORTANT**
**Please check with your dealer for the Information Kit if not located in the motorhome.**

## 1.3 OPTIONS AND EQUIPMENT

The equipment, accessories and components described in this manual may not necessarily apply to your vehicle. Refer to the material provided in the information kit for the detailed instructions unique to your unit.

1. Generator and Remote Switch
2. Air Conditioner
3. Awning
4. Compass/Temp Mirror
5. TV w/DVD & Antenna

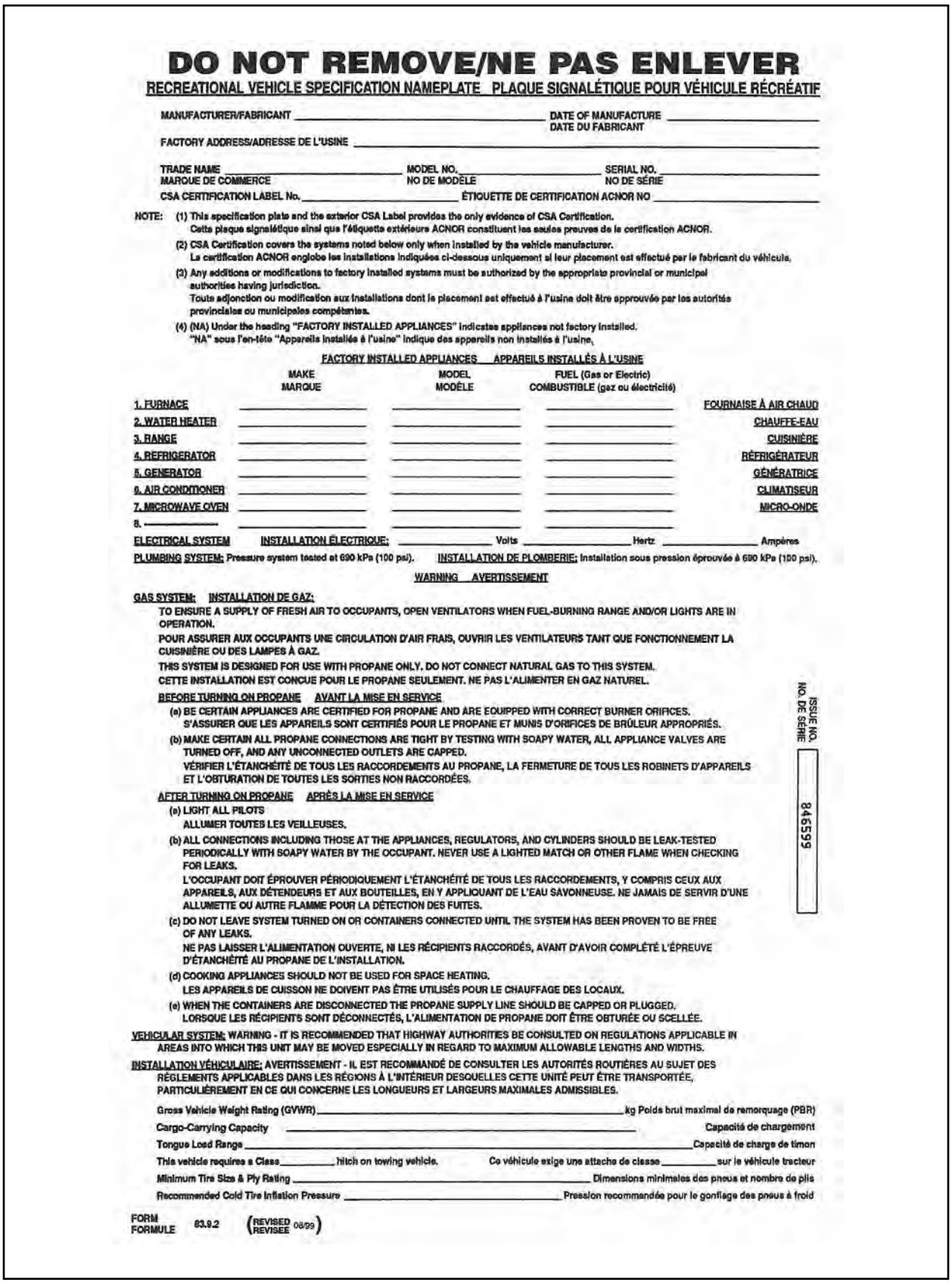

# DO NOT REMOVE/NE PAS ENLEVER

## RECREATIONAL VEHICLE SPECIFICATION NAMEPLATE PLAQUE SIGNALÉTIQUE POUR VÉHICULE RÉCRÉATIF

MANUFACTURER/FABRICANT _____ DATE OF MANUFACTURE / DATE DU FABRICANT _____

FACTORY ADDRESS/ADRESSE DE L'USINE _____

TRADE NAME / MARQUE DE COMMERCE _____ MODEL NO. / NO DE MODÈLE _____ SERIAL NO. / NO DE SÉRIE _____

CSA CERTIFICATION LABEL No. _____ ÉTIQUETTE DE CERTIFICATION ACNOR NO _____

NOTE: (1) This specification plate and the exterior CSA Label provides the only evidence of CSA Certification.
Cette plaque signalétique ainsi que l'étiquette extérieure ACNOR constituent les seules preuves de la certification ACNOR.

(2) CSA Certification covers the systems noted below only when installed by the vehicle manufacturer.
La certification ACNOR englobe les installations indiquées ci-dessous uniquement si leur placement est effectué par le fabricant du véhicule.

(3) Any additions or modifications to factory installed systems must be authorized by the appropriate provincial or municipal authorities having jurisdiction.
Toute adjonction ou modification aux installations dont le placement est effectué à l'usine doit être approuvée par les autorités provinciales ou municipales compétentes.

(4) (NA) Under the heading "FACTORY INSTALLED APPLIANCES" indicates appliances not factory installed.
"NA" sous l'en-tête "Appareils installés à l'usine" indique des appareils non installés à l'usine.

FACTORY INSTALLED APPLIANCES APPAREILS INSTALLÉS À L'USINE

| | MAKE / MARQUE | MODEL / MODÈLE | FUEL (Gas or Electric) / COMBUSTIBLE (gaz ou électricité) | |
|---|---|---|---|---|
| 1. FURNACE | | | | FOURNAISE À AIR CHAUD |
| 2. WATER HEATER | | | | CHAUFFE-EAU |
| 3. RANGE | | | | CUISINIÈRE |
| 4. REFRIGERATOR | | | | RÉFRIGÉRATEUR |
| 5. GENERATOR | | | | GÉNÉRATRICE |
| 6. AIR CONDITIONER | | | | CLIMATISEUR |
| 7. MICROWAVE OVEN | | | | MICRO-ONDE |
| 8. _____ | | | | |

ELECTRICAL SYSTEM INSTALLATION ÉLECTRIQUE: _____ Volts _____ Hertz _____ Ampères

PLUMBING SYSTEM: Pressure system tested at 690 kPa (100 psi). INSTALLATION DE PLOMBERIE: Installation sous pression éprouvée à 690 kPa (100 psi).

WARNING AVERTISSEMENT

GAS SYSTEM: INSTALLATION DE GAZ:

TO ENSURE A SUPPLY OF FRESH AIR TO OCCUPANTS, OPEN VENTILATORS WHEN FUEL-BURNING RANGE AND/OR LIGHTS ARE IN OPERATION.

POUR ASSURER AUX OCCUPANTS UNE CIRCULATION D'AIR FRAIS, OUVRIR LES VENTILATEURS TANT QUE FONCTIONNEMENT LA CUISINIÈRE OU DES LAMPES À GAZ.

THIS SYSTEM IS DESIGNED FOR USE WITH PROPANE ONLY. DO NOT CONNECT NATURAL GAS TO THIS SYSTEM.

CETTE INSTALLATION EST CONCUE POUR LE PROPANE SEULEMENT. NE PAS L'ALIMENTER EN GAZ NATUREL.

BEFORE TURNING ON PROPANE AVANT LA MISE EN SERVICE

(a) BE CERTAIN APPLIANCES ARE CERTIFIED FOR PROPANE AND ARE EQUIPPED WITH CORRECT BURNER ORIFICES.
S'ASSURER QUE LES APPAREILS SONT CERTIFIÉS POUR LE PROPANE ET MUNIS D'ORIFICES DE BRÛLEUR APPROPRIÉS.

(b) MAKE CERTAIN ALL PROPANE CONNECTIONS ARE TIGHT BY TESTING WITH SOAPY WATER, ALL APPLIANCE VALVES ARE TURNED OFF, AND ANY UNCONNECTED OUTLETS ARE CAPPED.
VÉRIFIER L'ÉTANCHÉITÉ DE TOUS LES RACCORDEMENTS AU PROPANE, LA FERMETURE DE TOUS LES ROBINETS D'APPAREILS ET L'OBTURATION DE TOUTES LES SORTIES NON RACCORDÉES.

AFTER TURNING ON PROPANE APRÈS LA MISE EN SERVICE

(a) LIGHT ALL PILOTS
ALLUMER TOUTES LES VEILLEUSES.

(b) ALL CONNECTIONS INCLUDING THOSE AT THE APPLIANCES, REGULATORS, AND CYLINDERS SHOULD BE LEAK-TESTED PERIODICALLY WITH SOAPY WATER BY THE OCCUPANT. NEVER USE A LIGHTED MATCH OR OTHER FLAME WHEN CHECKING FOR LEAKS.
L'OCCUPANT DOIT ÉPROUVER PÉRIODIQUEMENT L'ÉTANCHÉITÉ DE TOUS LES RACCORDEMENTS, Y COMPRIS CEUX AUX APPAREILS, AUX DÉTENDEURS ET AUX BOUTEILLES, EN Y APPLIQUANT DE L'EAU SAVONNEUSE. NE JAMAIS DE SERVIR D'UNE ALLUMETTE OU AUTRE FLAMME POUR LA DÉTECTION DES FUITES.

(c) DO NOT LEAVE SYSTEM TURNED ON OR CONTAINERS CONNECTED UNTIL THE SYSTEM HAS BEEN PROVEN TO BE FREE OF ANY LEAKS.
NE PAS LAISSER L'ALIMENTATION OUVERTE, NI LES RÉCIPIENTS RACCORDÉS, AVANT D'AVOIR COMPLÉTÉ L'ÉPREUVE D'ÉTANCHÉITÉ AU PROPANE DE L'INSTALLATION.

(d) COOKING APPLIANCES SHOULD NOT BE USED FOR SPACE HEATING.
LES APPAREILS DE CUISSON NE DOIVENT PAS ÊTRE UTILISÉS POUR LE CHAUFFAGE DES LOCAUX.

(e) WHEN THE CONTAINERS ARE DISCONNECTED THE PROPANE SUPPLY LINE SHOULD BE CAPPED OR PLUGGED.
LORSQUE LES RÉCIPIENTS SONT DÉCONNECTÉS, L'ALIMENTATION DE PROPANE DOIT ÊTRE OBTURÉE OU SCELLÉE.

VEHICULAR SYSTEM: WARNING - IT IS RECOMMENDED THAT HIGHWAY AUTHORITIES BE CONSULTED ON REGULATIONS APPLICABLE IN AREAS INTO WHICH THIS UNIT MAY BE MOVED ESPECIALLY IN REGARD TO MAXIMUM ALLOWABLE LENGTHS AND WIDTHS.

INSTALLATION VÉHICULAIRE: AVERTISSEMENT - IL EST RECOMMANDÉ DE CONSULTER LES AUTORITÉS ROUTIÈRES AU SUJET DES RÉGLEMENTS APPLICABLES DANS LES RÉGIONS À L'INTÉRIEUR DESQUELLES CETTE UNITÉ PEUT ÊTRE TRANSPORTÉE, PARTICULIÉREMENT EN CE QUI CONCERNE LES LONGUEURS ET LARGEURS MAXIMALES ADMISSIBLES.

Gross Vehicle Weight Rating (GVWR) _____ kg Poids brut maximal de remorquage (PBR)

Cargo-Carrying Capacity _____ Capacité de chargement

Tongue Load Range _____ Capacité de charge de timon

This vehicle requires a Class _____ hitch on towing vehicle. Ce véhicule exige une attache de classe _____ sur le véhicule tracteur

Minimum Tire Size & Ply Rating _____ Dimensions minimales des pneus et nombre de plis

Recommended Cold Tire Inflation Pressure _____ Pression recommandée pour le gonflage des pneus à froid

FORM / FORMULE 83.9.2 (REVISED / REVISEE 08/99)

NO DE SÉRIE / SERIAL NO. 84555

*Fig. 1-1 Specification Nameplate - located in the bathroom*

All Leisure Travel Vans motorhomes are built according to CSA and RVIA standards.

## 1.5.1 DEFINITIONS:



IDENTIFICATION INFORMATION LABEL LOCATED ON DRIVER DOOR FRAME

1. Recreational Vehicle manufacturer.
2. R.V. manufacture date.
3. Month and year of manufacture at Triple E Recreational vehicle.
4. **Gross Vehicle Weight Rating** (GVWR)**:**
   The maximum permissible weight of this fully loaded motorhome.
5. **Unloaded Vehicle Weight** (UVW)**:**
   The weight of this motorhome as manufactured at the factory with full fuel, engine oil and coolants.
6. **Cargo Carrying Capacity** (CCC)**:**
   Is equal to GVWR minus each of the following: UVW, full fresh (potable) water weight (including water heater), full LP - Gas weight and SCWR.
7. **Gross Combination Weight Rating** (GCWR)**:**
   The maximun allowable loaded weight of this motorhome and towed trailer or towed vehicle.
8. **Sleeping Capacity Weight Rating** (SCWR)**:**
   The mfg's designated number of sleeping positions multiplied by 154 lbs (70 Kgs).
9. **Gross Axle Weight Rating** (GAWR)**:**
   The value specified as the load carring capacity of a single axle system, as measured at the tire-ground interfaces.
10. **Tires:**
    Tires recommended to meet handling and safety requirements
11. **Rims:**
    Wheel rims recommended to meet handling and safety requirements.
12. **Cold Tire Inflation Pressure:**
    Inflation pressures recommended (while cold) for the tires originally equipped on your vehicle.
13. **Rear Axle Wheel Configuration:**
    Single axle/Dual wheels.
14. **Serial Number:**
    Identifies the sequence number assigned to the completed vehicle by Triple E Recreational Vehicles.
15. **Vehicle Identification Number (VIN):**
    Identifies the chassis on which the motorhome is built.
16. **Type:**
    States the National Highway Traffic Safety Association (NHTSA) designated usage classification for your motorhome. MPV signifies a Multi-purpose Passenger Vehicle.
17. **Model:**
    Lists the Triple E product model number of your vehicle.
18. **Color:**
    Signifies the color code number of the decor used throughout the vehicle. This number is necessary for ordering replacement cushions, curtains, carpet, etc. It is located in the wardrobe beneath the specification sheet.

**NOTE**

Triple E motorhomes are built according to CSA and RVIA standards.

## 1.5 VEHICLE CERTIFICATION LABEL

This label contains vehicle identification and other important reference information. The vehicle certification label is located on the driver's door or door frame. Never remove or destroy this label.

**CERTIFICATION LABELS**

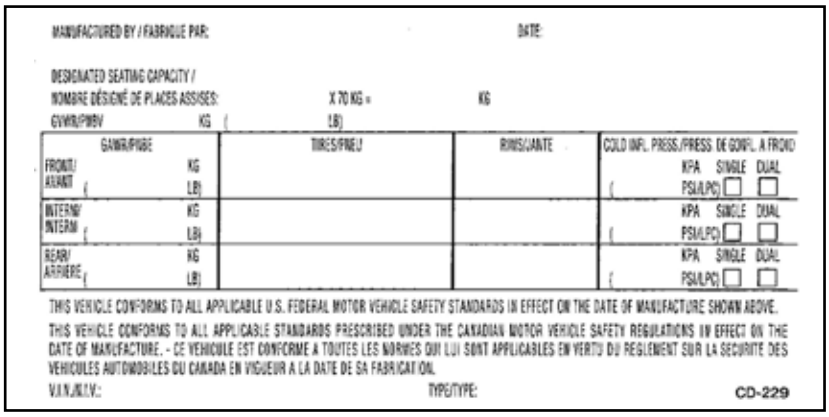

MANUFACTURED BY / FABRIQUE PAR: DATE:

DESIGNATED SEATING CAPACITY / NOMBRE DÉSIGNÉ DE PLACES ASSISES: X 70 KG = KG

GVWR/PNBV KG ( LB)

| GAWR/PNBE | | TIRES/PNEU | RIMS/JANTE | COLD INFL. PRESS./PRESS. DE GONFL. A FROID |
|---|---|---|---|---|
| FRONT/ AVANT | KG ( LB) | | | KPA SINGLE DUAL ( PSI/LPC) ☐ ☐ |
| INTERM/ INTERM | KG ( LB) | | | KPA SINGLE DUAL ( PSI/LPC) ☐ ☐ |
| REAR/ ARRIERE | KG ( LB) | | | KPA SINGLE DUAL ( PSI/LPC) ☐ ☐ |

THIS VEHICLE CONFORMS TO ALL APPLICABLE U.S. FEDERAL MOTOR VEHICLE SAFETY STANDARDS IN EFFECT ON THE DATE OF MANUFACTURE SHOWN ABOVE.

THIS VEHICLE CONFORMS TO ALL APPLICABLE STANDARDS PRESCRIBED UNDER THE CANADIAN MOTOR VEHICLE SAFETY REGULATIONS IN EFFECT ON THE DATE OF MANUFACTURE. - CE VEHICULE EST CONFORME A TOUTES LES NORMES QUI LUI SONT APPLICABLES EN VERTU DU REGLEMENT SUR LA SECURITE DES VEHICULES AUTOMOBILES DU CANADA EN VIGUEUR A LA DATE DE SA FABRICATION.

V.I.N./N.I.V.: TYPE/TYPE: CD-229

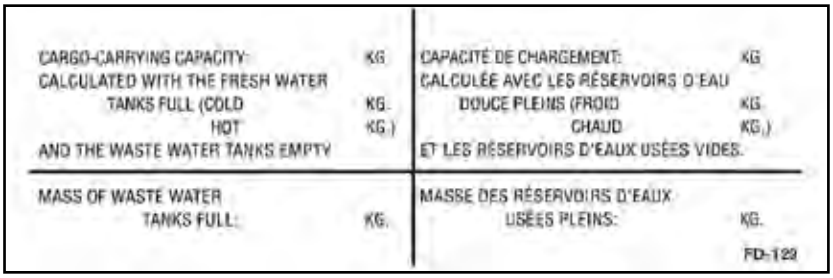

| | |
|---|---|
| CARGO-CARRYING CAPACITY: KG<br>CALCULATED WITH THE FRESH WATER<br>TANKS FULL (COLD KG.<br>HOT KG.)<br>AND THE WASTE WATER TANKS EMPTY | CAPACITÉ DE CHARGEMENT: KG<br>CALCULÉE AVEC LES RÉSERVOIRS D'EAU<br>DOUCE PLEINS (FROID) KG.<br>CHAUD KG.)<br>ET LES RÉSERVOIRS D'EAUX USÉES VIDES. |
| MASS OF WASTE WATER<br>TANKS FULL: KG. | MASSE DES RÉSERVOIRS D'EAUX<br>USÉES PLEINS: KG. |

FD-122

**CANADIAN**



**MOTORHOME WEIGHT INFORMATION** CD-130

VIN OR SERIAL NUMBER

**CARGO CARRYING CAPACITY (CCC) COMPUTATION** POUNDS | KILOGRAMS

**GVWR (GROSS VEHICLE WEIGHT RATING)** IS THE MAXIMUM PERMISSIBLE WEIGHT OF THIS FULLY LOADED MOTORHOME

**MINUS UVW (UNLOADED VEHICLE WEIGHT)** IS THE WEIGHT OF THIS MOTORHOME AS MANUFACTURED AT THE FACTORY WITH FULL FUEL, ENGINE OIL AND COOLANTS

**MINUS-FRESH WATER WEIGHT OF GALLONS @ 8.3 LB/GAL =**

**MINUS-PROPANE WEIGHT OF GALLONS @ 4.2 LB/GAL =**

**MINUS-SCWR (SLEEPING CAPACITY WEIGHT RATING)** IS THE MANUFACTURER'S DESIGNATED NUMBER OF SLEEPING POSITIONS MULTIPLIED BY 154 POUNDS (70 KILOGRAMS) OF **PERSONS @ 154 LB/PERSON** =

= **CCC (CARGO CARRYING CAPACITY)** IS EQUAL TO GVWR MINUS EACH OF THE FOLLOWING: UVW, FULL FRESH (POTABLE) WATER WEIGHT (INCLUDING WATER HEATER), FULL PROPANE WEIGHT AND SCWR **FOR THIS MOTORHOME***

**GCWR (GROSS COMBINATION WEIGHT RATING)** MEANS THE MAXIMUM ALLOWABLE LOADED WEIGHT OF THIS MOTORHOME AND ANY TOWED TRAILER OR TOWED VEHICLE.

*DEALER INSTALLED EQUIPMENT AND TOWED VEHICLE TONGUE WEIGHT WILL REDUCE CCC

**WARNING:** CONSULT OWNER MANUAL(S) FOR SPECIFIC WEIGHING INSTRUCTIONS AND TOWING GUIDELINES INCLUDING AUXILIARY BRAKE REQUIREMENTS FOR ANY TOWED TRAILER OR TOWED VEHICLE.

**U.S.**

| Custom Paint Colors |
|---|
| |
| 2003 Blue Horizon Decor |
| Skirt 1991 Ford Mocha Frost |
| RM #21146 Mfg. #DD |
| |
| |
| |
| |

**COLOR CODE SAMPLE**

## 1.5 EXTERIOR FEATURE IDENTIFICATION

Composite model shown for illustration purposes only. Actual locations of features depends on coach model and options.

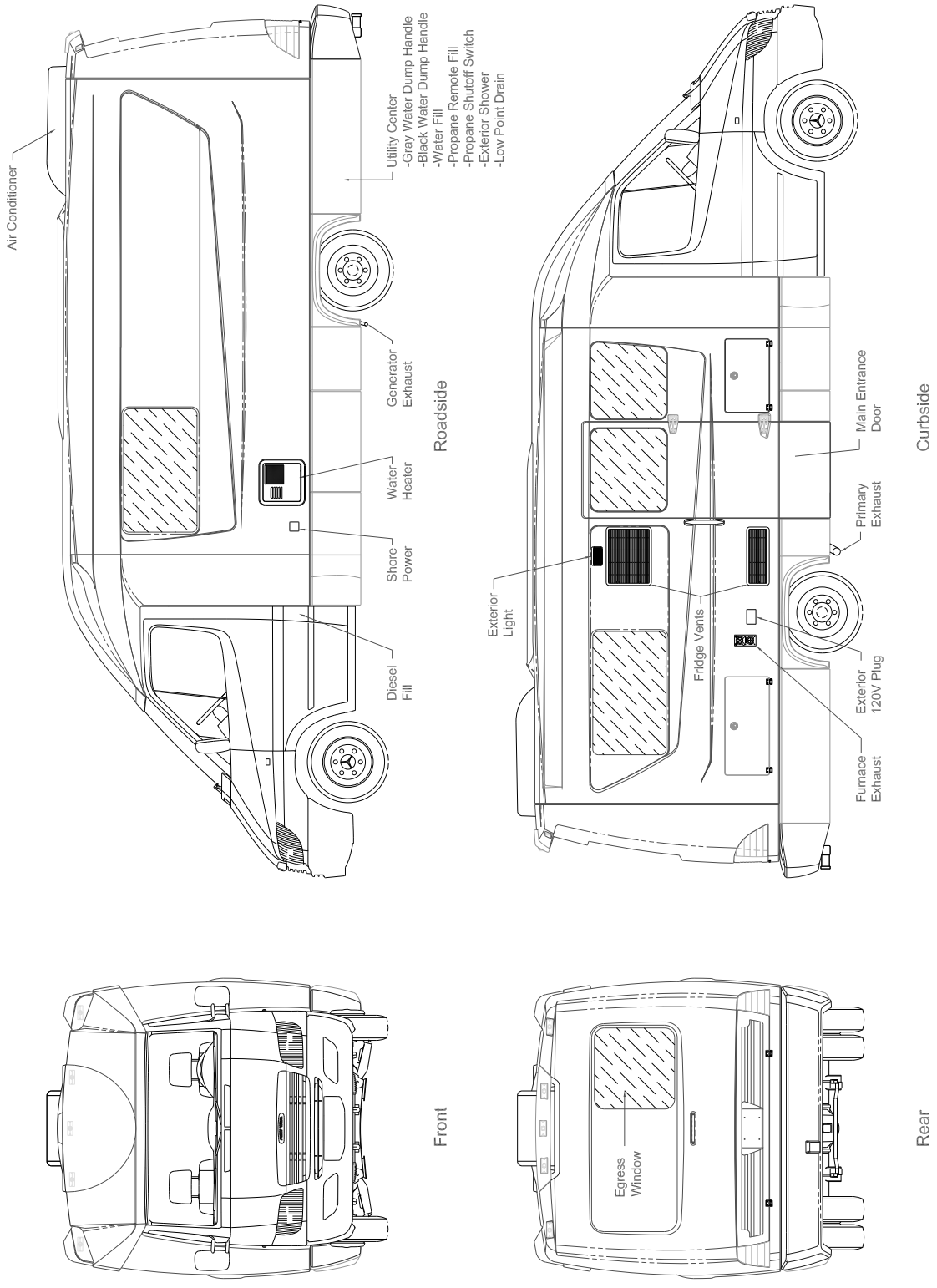


**CAUTION**

***Be careful. These features may become hot while water heater or furnace are in use.**

## 1.5 EXTERIOR FEATURE IDENTIFICATION

Composite model shown for illustration purposes only. Actual locations of features depends on coach model and options.

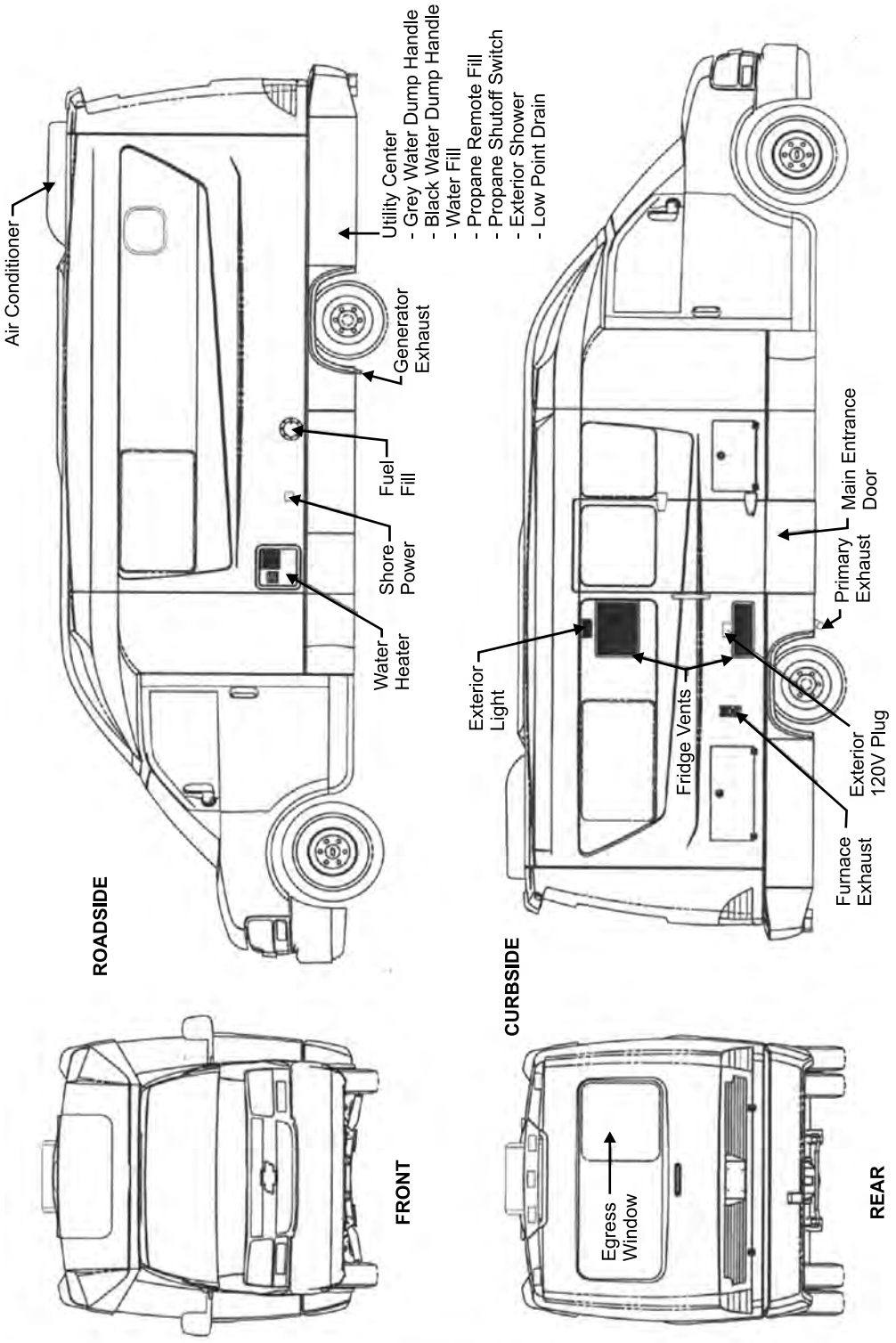


**CAUTION**

***Be careful. These features may become hot while water heater or furnace are in use.**

## 1.6 SERVICE ASSISTANCE

Your dealer will be glad to provide any additional information you need and to answer any questions you may have about the operation of your motorhome. When it comes time for service, remember that your dealer knows your vehicle best and is interested in your satisfaction. Your dealer will provide quality maintenance and assistance during the period of your ownership. It is advisable that you follow a regular maintenance schedule to keep your vehicle functioning at its best.

Should you require warranty assistance while travelling, call Leisure Travel Vans.
**1-877-992-9906**

## 1.7 REPORTING SAFETY DEFECTS

If you believe that your motorhome has a safety defect of any kind that could cause injury, or death, contact Leisure Travel Vans immediately. As well, make sure to contact the National Highway Traffic Safety Administration (NHTSA) in the U.S., or Transport Canada and report your concern.

The NHTSA will investigate the concern should there be a number of similar complaints. They have the authority to order a recall and repair campaign depending on the nature and severity of the problem.

The NHTSA may be reached by using the Auto Safety Hotline at 1-800-424-9393 (366-0123 in the Washington, DC area) or by writing to: NHTSA, US Department of Transportation, Washington, DC 20590. The Hotline will also provide you with additional information on motor vehicle safety.

In Canada, call 1-613-993-9851 or write to: Transport Canada and Road Safety, 2780 Sheffield Road, Ottawa, Ontario K1B 3V9.

### 1.7.1 COACH SPECIFICATIONS

| | SERENITY | | LIBERO | |
|---|---|---|---|---|
| | Standard | Metric | Standard | Metric |
| GVWR | 11030 lbs | 5003 kg | 12300 lbs | 5579 kg |
| Length (not incl. spare) | 24'4" | 7416 mm | 25'0" | 7620 mm |
| Width | 8'0" | 2438 mm | 8'0" | 2438 mm |
| Exterior Height (incl. A/C) | 9'6" | 2896 mm | 9'9" | 2743 mm |
| Interior Height | 6'3" | 1905 mm | 6'3" | 1905 mm |
| Wheelbase Length | 170.3" | 4326 mm | 177" | 4496 mm |
| Fuel Tank Capacity | 26.4 Gal | 100 L | 33 Gal | 125 L |
| Fresh Water Capacity** | 30 Gal | 113 L | 47 Gal | 178 L |
| Gray Water Capacity | 37 Gal | 140 L | 30 Gal | 113 L |
| Black Water Capacity | 29 Gal | 110 L | 29 Gal | 110 L |
| Propane Fill Capacity | 13.2 Gal | 50 L | 13.2 Gal | 50 L |
| ***Includes 6 Gal Water Heater* | | | | |

# 2. SAFETY

Safety, comfort and ease of operation are key considerations during the design and manufacturing of all LTV motorhomes. It is the responsibility of the owner or operator to read, understand and follow all instructions in the motorhome, chassis and appliance or auxiliary system manuals and from safety signs on the vehicle. Specific items, procedures or instructions are identified with the key words IMPORTANT, CAUTION and WARNING to emphasize areas of special concern. These key words are defined as:

**IMPORTANT -** This word is used to highlight or emphasize a specific procedure, information or result for a system or the vehicle.

**CAUTION -** This word is used to highlight or emphasize a specific procedure or information that if not followed will result in damage to a system or the vehicle.

**WARNING -** This word is used to highlight or emphasize a specific procedure or information that if not followed can involve your personal safety as well as cause vehicle damage.



The safety glyph  identifies an area that involves the personal safety of the operator, passengers or a bystander. Always read, understand and follow the instructions and information in the safety sign or manual instruction. Do not take chances with safety. Most accidents can be prevented.

In this section we have compiled a series of items relating to safety that everyone should follow. Although this compilation is thorough, we realize that it does not cover everything. Each person has the responsibility of following all listed safety items covered in this and other manuals.

## 2.1 GENERAL SAFETY 

1. The most important safety feature on this vehicle is a safe operator. It is the operator's responsibility to read, understand and follow all safety and operating instructions in the vehicle, chassis, appliance and system manuals. Most accidents can be prevented.

2. A person who has not read and understood all operating and safety instructions is not qualified to operate this vehicle. An untrained or uninformed operator exposes themselves, passengers and other drivers/vehicles/property to possible serious injury or death and property damage.

3. **Do not modify the vehicle in any way. Unauthorized modification may impair the function and/or safety and could affect the life of the vehicle.**

4. All approved driver and passenger seats are equipped with seat belts. When occupied while driving, each must be locked in the forward facing direction. **Each passenger must occupy only the *approved seats and fasten seat belts** when the unit is moving. Do not allow any passengers in the vehicle unless they have their seat belt attached while in an approved seat. When the vehicle is moving, no one should be using the sleeping, cooking, bathroom, living areas.

   *** Seats installed by the manufacturer with seatbelts are approved seats.**

5. Always fasten the seat belt low on the torso and keep it snug to transmit the force from the belt into the hip/pelvic area of the body. Pregnant women should wear a lap/shoulder belt whenever possible. Wear the belt snug and low throughout the pregnancy.

6. Establish a monthly fire extinguisher inspection program to keep the extinguisher in good condition and fully charged. Inspect the extinguisher again prior to a vacation or trip.

## 2.2 ALARMS

Each motorhome is equipped with an LP Gas, CO, and smoke alarm as standard safety equipment. Refer to alarm manual(s) for more detailed instructions. Keep all alarms in good working order.

Recurring alarm(s) indicate the slow accumulation of LP gas, carbon monoxide, smoke, or low battery levels. Have an authorized service center check system and identify source. Correct problem before resuming use of unit.

### 2.2.1 LP GAS ALARM

a. Sounds whenever there is an unsafe amount of gas in the vehicle.

b. Follow instructions on safety sign next to stove and air out vehicle to silence alarm.

c. Have a qualified service man find the leak and correct the problem before using unit again.

d. Refer to section 7, LP Gas System and alarm manual for more details.




*Fig. 2-1 LP Gas Monitor*

**WARNING**

**IF YOU SMELL GAS**

1. **Extinguish any open flames, pilot lights and all smoking materials.**
2. **Do not touch electrical switches.**
3. **Shut off the LP tank valve.**
4. **Open doors, windows and roof vent after making sure the roof vent fan is OFF.**
5. **Leave the area until odor is gone.**
6. **Have the system checked for leaks and make the necessary corrections and repairs.**

**NOTE: This label on the stove top cover SHOULD NOT be removed.**

## 2.2.2 CARBON MONOXIDE/ SMOKE ALARM

All units are equipped with carbon monoxide/smoke combination alarm.

**CARBON MONOXIDE ALARM** *(Fig. 2-2)*

a. It sounds whenever there is an unsafe amount of carbon monoxide gas in the vehicle.
b. Open doors, vent and windows to air out vehicle and silence alarm.
c. Have a qualified service technician check all burners. Clean, repair or replace any defective burners.
d. Remove all fuel or wood burning devices from inside vehicle.
e. Have a qualified service technician check all engine exhaust system components. Repair or replace any defective components. Position motorhome so wind blows exhaust fumes away.

**SMOKE ALARM** *(Fig. 2-2)*

a. Sounds whenever there is an unsafe amount of smoke in the vehicle. Always use the roof vent when cooking.
b. Open doors, vents and windows to air out vehicle and silence alarm. Correct and eliminate smoke source.
c. Check alarm on a regular basis. Check when removing from storage, before trips and weekly thereafter. Depress center button to test alarm electronics. Test alarm sensor by blowing smoke (from safe, fire-free source) past sensor. If alarm does not sound when testing, determine source of problem and correct or replace alarm.
d. Do not remove battery to silence alarm. When alarm “beeps” every minute, battery is weak and must be replaced. Do not allow battery to go dead. Be sure to replace with recommended battery. Replace the battery at least annually and test after battery is replaced.
   To replace battery, remove cover, exposing compartment. Remove and replace battery. Make certain wires are properly connected. Position and close cover.
e. Clean and vacuum opening on smoke alarm once a month.
f. Do not try to repair alarm. Replace it.
g. Smoke alarms are not perfect and do not respond in all situations. The best safe-guard is fire prevention.




***Fig. 2-2 Carbon Monoxide/ Smoke Alarm***

**WARNING**

**Carbon Monoxide gas is a odorless and colorless gas that is lethal to people. Do not breathe any exhaust, heating or cooking fumes to prevent asphyxiation.**

## 2.3 FIRE PREVENTION

Fires can be started in a variety of ways with your vehicle including but not limited to careless smoking, malfunction of appliances or equipment, flammable material on hot surfaces, etc. Fires are best prevented rather than put out. Prevent but anticipate what to do if they occur. Review the following sections with everyone on a regular basis.

### 2.3.1 FIRE SAFETY TIPS

1. Establish and maintain good housekeeping practices. Never allow combustible materials to accumulate. Make sure you store flammable liquids in approved containers in a well-ventilated space.

2. Make sure you have charged fire extinguishers readily accessible.

3. Avoid using flammable products in the motorhome.

4. Never smoke in bed or when relaxing on the couch.

5. Do not overload electrical outlets.

6. Do not leave cooking food unattended.

7. Keep children away from electrical outlets and LP gas controls.

8. Never use matches to check for LP gas leaks. If there is a fire, get everyone out of the motorhome. If possible, use your fire extinguisher. Close all LP gas valves if possible. Call the fire department and stay a safe distance away from your unit. Do not re-enter your motorhome until the fire officials declare that it's safe to do so.

### 2.3.2 FIRE EXTINGUISHER

Your fire extinguisher is located on the passenger side dinette/side entry door. *(Fig. 2-4)*

1. **Operation:**
   a. Stay a safe distance from the fire and near an exit. The chemical from the fire extinguisher will shoot at least 10 feet. Stay close to the floor to avoid heat and fumes.

   b. Pull the pin; grasp the fire extinguisher firmly holding it in an upright position.

   c. Push the lever down. Aim at the base of the fire spraying the entire base area. Don't spray at the smoke or flames.



***Fig. 2-4 Fire Extinguisher (PS Dinette/side entry door)***

   d. After the fire is out, watch for "flashback".

   e. Discharge the fire extinguisher entirely and get it recharged or replaced immediately.

   f. For additional information, check in the manual that is provided with the Fire Extinguisher.

2. **Function:**
   a. Fire extinguishers are designed to put out a fire in its initial stages. Once a fire is out of control and you cannot get within ten feet, it is probably too big to fight with your extinguisher.

   b. Do not discharge your fire extinguisher to test it. Once it is discharged even for a few seconds it will lose pressure and become useless.

   c. Check the pressure indicator on your fire extinguisher periodically. It if loses pressure, the dry chemical cannot be discharged effectively. **If the pointer does not indicate in the green, replace the extinguisher immediately. Record the inspection date on the tag provided.**

## 2.4 EMERGENCY ESCAPE

Use the rear window or side entry doors as emergency escape routes. Escape routes are easily identified by the exit decals.

# 3. VEHICLE OPERATION

## 3.1 VEHICLE PREPARATION

Before you even begin to consider taking an extended camping trip, get to know your motorhome, its components, features, appliances and limitations. Take some time to read and study this manual and all its components.

Preparation is the key to an enjoyable and successful camping trip. Your motorhome really gives you the freedom to do what you want, where you want and when.

The time you spend getting to know your motor home will certainly go a long way in making you totally satisfied with your purchase.

### 3.1.1 KEYS

It is a good idea to keep a record of all key code numbers and keep them in a safe place - not in your vehicle. Please see your local chassis dealer to obtain replacement keys.

### 3.1.2 VEHICLE LOADING & WEIGHING

The components of your vehicle are designed to provide satisfactory service if the vehicle is not loaded in excess of either the gross vehicle weight rating (GVWR) or the maximum front and rear gross axle weight ratings (GAWR's). These ratings are listed on the Canada and U.S. Department of Transport Sticker located on the driver door post.

The (GVWR) Gross Vehicle Weight Rating, is the maximum permissible weight of the fully loaded motorhome.

The (UVW) Unloaded Vehicle Weight is the weight of this motorhome as manufactured at the factory with full fuel, engine oil and coolants.

The (CCC) Cargo Carrying Capacity, is the maximum weight of all occupants including the driver, personal belongings, food, fresh water, LP Gas, Tools, Dealer Installed Accessories, etc., that can be carried by this motorhome. (CCC is equal to or less than the GVWR minus UVW).

The (GCWR) Gross Combination Weight Rating, means the maximum allowable loaded weight of this motorhome and any towed trailer or towed vehicle.

The (GAWR) Gross Axle Weight Rating, is the value specified as the load carrying capacity of a single axle system, as measured at the tire-ground interfaces.

To check that your motorhome is properly loaded, drive the fully loaded vehicle to a scale and weigh as follows:

a. Drive only the front wheels onto the scale to obtain the front gross axle weight.

b. Next, place the entire vehicle (both axles) onto the scale to obtain the gross vehicle weight.

c. Drive forward till only the rear wheels are on the scale and obtain the rear gross axle weight.

d. To obtain corner weight for your motorhome drive each tire individually onto the scale and record the weight.

Compare the gross vehicle weight with the GVWR on the sticker. If the gross vehicle weight exceeds the GVWR, you will have to reduce the total vehicle load. If the gross vehicle weight is less than the GVWR on the sticker, check the front and rear gross axle weights against the front and rear GAWR's on the sticker. If either axle weight exceeds the GAWR for that axle, redistribute the load to ensure that loads on front and rear axles are within the required limit.

Heavier items should be loaded as centrally and as low as possible. Lighter items may be stored in cabinets, closets and drawers. Luggage or similar cargo inside your RV should be secured to prevent it from causing damage.

**CAUTION**

**Total vehicle load should NOT exceed the respective Maximum GVWR/GAWR/GCWR of the chassis.**

## 3.1.3 TRAILER TOWING

Towing a trailer can affect the handling, durability, performance and economy of your motorhome. The factory installed certified class 3 towing hitch is rated for:

a. 500 lb. - maximum hitch or tongue weight.

b. 5000 lb.- maximum trailer weight.

The combined weight of the motorhome and the towed vehicle should not exceed the Gross Combined Weight Rating (GCWR). Also, the combined weight of the motorhome and towed vehicle should not exceed the motorhome's Gross Vehicle Weight Rating (GVWR) or its rear Gross Axle Weight Rating (GAWR) as listed on the Vehicle Certification label.

To be sure of the correct balance in weight, it is advised that you take your loaded vehicle to a weigh-scale to determine the actual weight distribution. After you have done this once, you will have a better idea on how to load in the future.

Remember, your motorhome will handle differently with a trailer in tow. Stopping distances will change. Make sure your trailer is equipped and connected to your motorhome with the proper brake system. When descending a steep or long grade, reduce speed and shift to a lower gear to control vehicle speed. Avoid prolonged or frequent application of brakes if at all possible to prevent overheating and possible failure of the braking system. See Chassis owner's manual for more info.

## 3.1.4 AUXILIARY VEHICLE TOWING

If you are planning to pull a vehicle or a trailer with your motorhome, your dealer will provide you with the information, advice and direction you will require.

**⚠ WARNING**

**For safety towing and vehicle handling, maintain proper vehicle and trailer weight distribution. The total weight of the motorhome and the vehicle towed must not exceed the GCVW rating as stated on the Vehicle Certification label.**

## 3.1.5 OUTSIDE STORAGE



***Rear Storage Compartment***
***(Location of awning crank and support arm)***



***Driver Side Front***



***Passenger Side Rear***

## 3.1.6 PRE-TRIP INSPECTION

1. Be sure all equipment is serviced and ready for travel.

2. Inspect wheel lugs for tightness. Examine all tires for road damage. Ensure that all tires are inflated to proper pressure.

3. Check All Fluids:

   a. Engine/Crankcase Oil

   b. Power Steering Fluid

   c. Radiator Recovery System

   d. Reservoir Level

   e. Battery Electrolyte Level

   f. Windshield Washer Reservoir

4. Check oil level in generator power plant (if installed). Refer to Instruction and Maintenance Manual provided by the generator manufacturer for other pre-use requirements.

5. Consult Chassis Manual for recommended list of pre-trip checks.

6. Check to see that all lights are in working order.

7. Check the engine compartment for animals. Animals and pets like the warmth of the engine compartment but make a real mess if caught in the belts.

8. Sanitize and fill fresh water tank if required. Turn off the water pump. (Unless water is needed). The water pump should also be turned off when leaving the unit for any length of time. (See monitor system for water pump switch.)

9. Start the refrigerator a day ahead of time so it will be cold for your trip.

10. Make certain the coffee maker is in place and secured. (See tie-down, c/w snap).

11. Fill LP gas container. Be careful not to overfill LP gas container. An overfilled LP gas container will cause the gas regulator to fail, and may result in problems with LP gas components. Turn off LP gas valve control located in the **UTILITY CENTER**. Make sure all LP gas controls are turned off (Furnace, Oven, Fridge). Check for LP gas leaks regularly using soapy water.

12. Check that sewer connections are properly stored and all external compartments and filler openings are closed and/or locked.

13. Check roof vent to ensure it closes and opens.

14. Be sure all doors are closed and latched, and all loose objects secured (including refrigerator contents).

15. Deodorize waste holding tank. (*See Section 7.2.4 for details).*

16. Check that all blocks and chocks are removed and/or stowed.

17. Check that there are no obstructions in the motorhome pathway when it moves. Be sure there is proper clearance between adjacent objects to prevent contact.

18. Disconnect and stow shoreline.

19. Lock exterior compartment doors.

20. Check that the fire extinguisher is in good condition and fully charged.

**⚠ WARNING**

**All appliances shall be turned off during refuelling of motor fuel tanks and/or propane containers.**
**Do not smoke when refuelling.**

## 3.1.7 EMERGENCY EQUIPMENT CHECK LIST

Use this list as a guide to identify the minimum amount of emergency or safety equipment. Take more as appropriate for your travel or personal needs.

1. First Aid Kit
2. Emergency Flares
3. Tool Box and Tools
4. Plastic Bucket
5. Tow Rope or Chain
6. Wheel Blocks or Jacks
7. Water Hose
8. Electrical Cord Extension
   (100-150 ft./minimum 3 wire/50 amp)
9. Fire Extinguisher

## 3.1.8 FINAL CHECKS

1. Check that TV antenna is retracted, stowed and secured.

2. Secure all objects in vehicle. Tie, latch or lock all loose objects as appropriate. Unsecured objects can become a dangerous projectile in a sudden manoeuvre or accident.

3. Securely close and lock all doors to minimize the chance of a door coming open in an accident.

4. Adjust the rearview mirrors to provide the best rearward visibility.

5. Set the drivers seat to provide the desired leg to pedal spacing for your personal comfort.

6. Fasten seat belts low on the torso and be sure they are snug. All passengers should be in a seat that is equipped with a seat belt. All pregnant riders should be in a seat equipped with a shoulder strap for maximum safety.

7. Small children should always be strapped into a car seat facing rearward.

8. Do not carry any passengers unless they are in a seat equipped with a seat belt and the belt is fastened.

## 3.1.9 MAXIMUM OCCUPANCY

The belted seating positions in your motorhome may be different than the stated sleeping capacity. This is referred to as the Cargo Carrying Capacity (CCC).

**WARNING**

**All occupants must be in seats equipped with lap or shoulder harness seat belts and the seat belt fastened before travelling. Small children should always be placed in a certified child restraint system and secured with a seat belt.**

## 3.1.10 REAR AIR SUSPENSION (OPT.)

Your motorhome is equipped with an air assist suspension system that can be pressurized to provide the desired stiffness. Never operate at less than 20 psi or more than 100 psi. A higher pressure gives a stiffer system.

**WARNING**

**The Ride Rite Air Ride System pressure should not be run under 20 psi. Damage may occur to system if pressure is run lower than 20 psi.**




***Dual Control Air Gauge***



***Compressor Located in driver side dinette***

## 3.2 SEATING/SLEEPING

### 3.2.1 FRONT DINETTE

**Dinette Conversion:** The front dinette converts into a bed: See conversion photos below.



*Seat Configuration*

### SLEEPING CONFIRGURATION



*Stage 1*



*Stage 2*



*Stage 3*



*Stage 4*



*Stage 5*

**WARNING**

**Do not use sleeping facilities while motorhome is in motion.**

## 3.2.2 ELECTRIC REAR SOFA (OPTIONAL)

Where equipped, the rear sofa provides three additional seating positions.

**CONVERTING TO A BED**

Lower the sofa with switches located on rear refrigerator cabinet wall*(Fig. 3-2)*.

**ELECTRIC SOFA MALFUNCTION**

In case of sofa electric malfunction, sofa maybe operated manually. Open outer access door located on passenger side. Under the seat section of the sofa there are two silver drive units located at either end of sofa. Holding these drive units in place are two red cotter pins *(Fig. 3-3)*. To move the sofa manually you must remove these pins, and remove the silver nuts at the end of the drive cables. If you are going to use the sofa as a seat while driving, you must secure the sofa in the seat position by reinstalling the pins and reattaching the drive cables.



***Sofa, Bed Position***



***Rear Sofa Control Switches***

***Fig. 3-2 Optional Rear Sofa***



***Fig. 3-3 Sofa Cotter Pin***

## 3.2.3 SEAT/SHOULDER BELTS

Every occupant must be seated in an approved seat with the belt fastened whenever the motorhome is moving. Accident statistics prove the importance of the need to use seat belts. Vehicle occupants not seated in an approved seat and restrained with a seat belt received more injuries of a more serious nature than those properly restrained.

1. **Lap/Shoulder Belts:**
   The driver and passenger seats are equipped with a combination lap and shoulder belt for maximum restraint.

2. **Lap Belts:**
   Never travel in a seat that is not equipped with a lap or shoulder belt.

3. **Pregnancy:**
   Pregnant women should wear their lap belts low on their torsos and shoulder straps diagonally across their chests. Do not position the strap against the neck. Wearing a seat or shoulder/lap belt properly will protect both the mother and the unborn child.

4. **Child Restraints:**
   Child restraint systems are a legal requirement in most jurisdictions of North America. Statistics prove that children not secured with a certified child restraint system experience more severe and more frequent injuries than those properly restrained. In order to provide the safest restraint system for your child during transport, follow these considerations when selecting an appropriate child restraint system:

   a. Purchase a child restraint system that is labelled to be certified to all applicable US Motor Vehicle and Canadian Children's Car Seats and Harness Regulations.

   b. Make sure the system will attach to your vehicle conveniently and provide safety for your child every time it is used.

   c. Be sure the restraint system is suitable and adequate for your child's age, weight and height. Check the label for this information.

   d. Review the instructions supplied with the child restraint system. Be sure that anyone placing a child restraint system in a vehicle fully understands how it must be located, anchored and used. Improperly placed or anchored restraints will not provide an acceptable level of safety for your child.



*Fig. 3-4 Captain Chair Seatbelt*

**IMPORTANT**

**All seat belt retractors are equipped with locks that engage when the belt moves too fast. Move the spade end slowly and steadily when fastening to prevent locking. If belt locks while fastening, release end and let it retract fully. Then pull again to fasten.**

## 3.2.4 DRIVER/PASSENGER SEAT CONTROLS (OPTIONAL SEAT SWIVEL)

1. **Swivel Function (Driver's Side)**
   a. Open driver's door slightly

   b. Slide seat forward.

   c. Pull centre lever.

   d. Push swivel seat clockwise 1/4 turn.

   e. Close door.

   The seat now faces the passenger side, with the seatback against the driver's side door. *(Fig. 3-6)*

2. **Swivel Function (Passenger Side)**
   a. Open passenger's door slightly

   b. Slide seat forwards.

   c. Move armrest into upright position.

   d. Pull centre lever.

   e. Swivel seat clockwise slowly to prevent damage to the door panel and post. *(Fig. 3-6)*




***Fig. 3-6 Front Seat Swivels***

**IMPORTANT**

**DO NOT SWIVEL SEATS WHEN VEHICLE IS IN MOTION AND ALWAYS OPEN DOORS SLIGHTLY, SWIVEL SEATS CLOCKWISE AND RETURN SEAT TO IT'S ORIGINAL POSITION COUNTER CLOCKWISE.**

## 3.3 TRAVELING

Refer to the chassis manufacturer manual for engine starting and stopping instructions.

### 3.3.1 DRIVING CHARACTERISTICS

1. **Controls:**
   The motorhome driver controls are automotive type and the steering and braking controls are power assisted to help make driving as comfortable as possible. However it must be remembered that the motorhome is much higher, wider and heavier than a family automobile.

2. **Handling:**
   The motorhome power-to-weight ratio is lower than that of the average automobile. Therefore it is essential to compensate for less acceleration when moving into traffic or when passing another vehicle. Allow extra room to run a corner and to change lanes. When going underneath a bridge or similar overhang you must be aware of your maximum height. Overhang must be a **minimum of 10 feet high** for sufficient clearance.

3. **Mountain Driving:**
   When driving in hilly or mountainous terrain you should employ different driving techniques than those used when driving under normal, flat conditions.

   a. **Climbing a Hill:**
   The transmission is designed to down-shift automatically when required during a longer uphill climb. If you find that the transmission shifts up and down rather frequently, it is a good idea to select a lower gear for the duration of the climb to prevent this repeated shifting. This will prevent unnecessary wear and tear on your transmission.

**CAUTION**

**Observe the engine temperature carefully especially during long climbs.**
**If you notice over-heating, pull off the road and allow the engine to cool off thoroughly before you continue. Fill the radiator with coolant if necessary.**

   b. **Descending a Hill:**
   It is a good idea to select a lower gear on your transmission when descending a hill to avoid prolonged application of the brakes. Extended application of the brakes can cause unnecessary wear and tear and overheating. Under extreme conditions this could cause you to lose control of the vehicle.

**A STANDARD RULE OF THUMB:**
Use the same lower gear position when descending a hill as you used while climbing the hill.

### 3.3.2 DRIVING SAFETY TIPS

1. When backing the motorhome, have a person stand to the rear on the driver's side to guide you.

2. Before departing on the trip, check your routes. Remember, some tunnels prohibit motorhomes with LP gas systems.

3. While travelling, **make sure** all occupants use their seatbelts.

4. While travelling, **make sure** all doors are closed and that cabinets, drawers, and loose objects are secure.

5. Instruct your family on what to do in case of fire, and hold fire drills periodically.

6. Maintain proper charge in the fire extinguisher.

7. Gas and smoke detectors should not be obstructed and should be in working order at all times.

8. Keep a well stocked first aid kit handy.

9. Keep a tool box handy.

10. Check tires often while travelling. Make it a habit to check tire pressures before each trip, and each time you refuel.

11. Cellular Phone - If you have one carry it with you.

## 3.3.3 TRAVEL TIPS

As you travel with your motorhome you will learn much from your own experiences. Share with other motorhome owners and learn from them. Read RV, outdoor and camping magazines for camping and travel tips. Here are a few basic suggestions to make your travel and your camping easier and more enjoyable:

1. **Know the height and width of your motorhome. Make adequate allowance for clearance.** ***See chart 1.6.1 on pg. 1-6***

2. Always fill your water tank with clean, fresh, potable water. Do not use a new hose to fill the tank. It may leave a taste of rubber or vinyl.

3. Conserve water especially when showering. The holding tanks have a limited capacity.

4. Dump sewage only at approved dumping sites.

5. Store all liquids in plastic containers with tight seals.

6. Watch the levels in your holding tanks. Dump regularly to avoid unnecessary build-up and potential odor. After dumping, make sure to add water to the black water tank to prevent solids from settling in the tank. Without adequate liquid in the black water tank, dumping can be difficult, if not impossible.

7. Sleeping bags are a good idea. They take up less storage space than regular bedding and they save on laundry while travelling.

8. Make sure all compartment doors and refrigerator and freezer doors are closed securely. Open these doors carefully after travelling. The contents may have shifted while travelling.

9. The roof vent should be in the closed position when travelling. To allow for ventilation it is a good idea to slightly open one or two of the side windows.

10. Reserve campsites in advance to avoid disappointment.

11. There are legal restrictions in some jurisdictions regarding vehicles with LP gas containers driving through highway tunnels. Check your route carefully as you travel.

12. Be careful not to leave odor-causing food or materials in your motorhome for extended periods of time. Make sure wet clothing and towels are dry before storing.

13. Make sure your fire extinguisher is ready for use and that you know how to operate it.

14. Try to shop for groceries before you “set up camp”. This will allow you to relax and not have to leave your campsite after you have set up.

15. While driving, use your mirrors to determine whether you are crowding the center line or the outside edge of the highway. Remember, you are driving a vehicle that requires a driving style quite different from driving the family car.

## 3.3.4 PARKING

1. **Parking:**
   The motorhome can be stopped and parked just like an automobile. However always remember that the unit is longer, wider and higher than a car and more room and clearance must be provided.

2. **Backing Up:**
   a. **Mirrors:**
      Large mirrors are mounted on both sides of the cab to provide rearward visibility for the drivers. However, they do not provide visibility directly behind or on top (clearance) of the unit.

   b. **Spotters:**
      The best results are obtained when another person helps guide the driver in backing the unit into position. The driver and spotter should agree to the meaning of hand signals before starting the backing process. The spotter should always be in a position that is visible to the driver while backing.

   c. **Back-up monitoring system (optional):**
      See camera monitoring system manual for proper operation.

3. Always set the parking brake and place chocks in front of and behind the wheels to prevent rolling away.

**WARNING**

**When parking or storing RV, unit must be level to avoid water infiltration through A/C area.**

## 3.3.5 LEVELLING

If you want to use any of the appliances when occupying the motorhome, it will be necessary to level the motorhome frame. The refrigerator is particularly sensitive and must be within a couple of degrees of level to function properly. A little time and planning done prior to starting to level will insure maximum enjoyment of your motorhome.

1. Inspect the area where the motorhome will be parked. Select if possible an area that has a firm prepared surface. Most campgrounds provide this type of parking area for motorhomes.

2. Select an area that is level or as near to level as possible.

3. Use a carpenter's level on the floor to determine where to place blocks to level the frame.

4. Level from side to side first, then from front to back. Place planks under the low side and drive the motorhome forward until the tires are resting on the planks.

**WARNING**

**Always exercise care and caution when parking and levelling your motorhome. Make sure everyone, especially children, are well clear until the vehicle has been stabilized.**

## 3.3.6 EXTENDED USE

Motorhomes are generally designed for recreational and short-term occupancy. In case of extended occupancy there are a few things to keep in mind regarding humidity and condensation. Moisture condensing on the windows is a sure sign that the humidity inside your motorhome is too high. To reduce moisture inside your motorhome we suggest the following:

1. Open windows and vents. This will allow fresh air to flow through and reduce the moisture content.

2. Reduce moisture released inside the motorhome. Run the bathroom fan when using the bathroom. This will remove unnecessary moisture from your motorhome.

## 3.4 EMERGENCIES WHILE DRIVING

The Leisure Travel Vans motorhome is designed with features that allow the driver/occupants to resolve emergencies or failures when travelling. Review this section to be familiar with the recommended procedure to resolve these conditions or situations. Review this section with all new drivers and before each trip.

### 3.4.1 HAZARD WARNING LIGHTS

Each motorhome is designed with a hazard warning light system that is similar to the system on an automobile. Both the front and rear turn signals flash in unison when the system is turned on.

Refer to the chassis manual for details and location of this switch.

It is recommended that the warning lights be used whenever the vehicle is stopped on the side of the roadway. The intermittent flashing lights will alert other motorists to a potential hazard and to take extra care. The system is designed to continue to flash when the switch is on even though the ignition key is removed and you have left the vehicle.

If you have further questions check the chassis manual.

### 3.4.2 FLAT TIRE

When you have a flat tire while driving, slow the vehicle gradually to prevent losing control and pull off to the side of the road. Stop on a level firm surface and engage parking brake. Turn on hazard warning lights to alert other drivers to use extra caution when driving in the vicinity.

Refer to chassis manual for instructions on where to place jack under the frame.

It is recommended that a professional qualified road service be used whenever possible. If this is not possible, follow the instructions in the chassis manual.

Be sure the lug nuts are tightened to their specified torque. Always use an accurate torque wrench when mounting the wheel. Check the torque and re-tighten after 25 and 100 driving miles. Check the torque at each oil change.

**Safety Reminders:**

1. Park the motorhome on a level surface.
2. Turn off the engine and set the parking brake.
3. Turn on the hazard warning flasher.
4. Place tire chocks in the front and back of the tire on the opposite side of the vehicle from the flat tire.
5. If the ground is soft, use a support board under the jack to keep the jack from sinking.
6. Make sure to use only the jacking points described in your chassis owner's manual.
7. Never get any part of your body under the vehicle while jacking or while it is suspended.

**IMPORTANT**

**LIBERO & SERENITY MODELS NOT EQUIPPED WITH FACTORY SPARE TIRE**

## 3.4.3 WHEN VEHICLE IS DISABLED

1. **Emergency Starting:**
   Do not tow the motorhome in an attempt to start it. The powertrain is not designed to transmit torque to turn the engine over for starting.

2. **Jump Starting:**
   Open the hood to access the battery. Always connect positive end of jumper cable to positive battery post and negative to the frame.

**WARNING**

**BATTERY BOOST WARNING**
**Always check Chassis Manual for proper procedure.**

3. **Vehicle Break-Down:**
   When the vehicle breaks down, it should be towed in for repair by an approved towing service. If the vehicle breaks down on the roadway, pull off the road and stop. Engage parking brakes and turn on the hazard warning lights. Place chocks by the wheels if it is not level.

   Call an approved towing service to come and get the motorhome. Be sure to tell the towing service what kind of vehicle it is and its weight, length, width and height. The towing company will then dispatch a proper sized tow truck for your vehicle.

## 3.4.4 OVERHEATING

When the engine overheats while driving:

1. Pull off to the side of the road and stop immediately.

2. Shut engine off.

3. Check for proper coolant level in the recovery tank. The coolant level should be between the "full" and "add" marks on the tank.

4. **If the coolant level is low:**

   a. Check for leaks at hose connections, from the radiator or at the water pump. Make sure the belts are tight and that the cooling fan is turning.

   b. Add coolant to the recovery tank as soon as possible.

   c. If coolant is being lost due to leaks; if the fan belt is broken or too loose; if the red warning light stays on, stop the engine until the problem is corrected.

5. Once the temperature gauge returns to normal, resume driving, keeping an eye on the gauge. Do Not resume driving until the problem has been corrected and the temperature is normal.

**WARNING**

**Never remove the radiator cap when the engine is hot. Scalding fluid and steam can blow out and cause severe burns.**

## 3.4.5 SEVERE WEATHER INFORMATION

As a motorhome traveller you will find the desire to explore new and out-of-the-way places irresistible. These recreational areas can be vulnerable to unusual and severe weather conditions that could endanger your safety. A few suggestions and safety precautions may help in case you ever find yourself in this situation.

**IMPORTANT**
**All motorhome occupants should be familiar with these safety precautions and be alert to changes in the weather.**

1. Be alert! Thunderstorms and heavy rains can occur suddenly and unexpectedly. Listen frequently to weather reports for the area in which you are camping or travelling.

2. When camping near a stream or any body of water leave plenty of space between your motorhome and the stream.

3. Avoid canyons or dry washes during threatening weather. Prepare with an alternate exit. Move to higher ground as soon as it starts raining.

4. Should you get caught in a flash flood, do not attempt to move your vehicle. Abandon it and return to it only after the water has gone down. Never attempt to drive through any flooded area.

5. Heed the warnings and instructions of local authorities.

6. Have on hand enough survival supplies for several days. This should include food, water, first-aid supplies and necessary medications.

7. When you leave home, inform someone of your destination and your schedule. Notify the same people if and when your plans change.

8. **Remember These Terms:**

   a. **Weather Watch:**
   Severe weather may develop in your area. Be prepared for an emergency.

   b. **Weather Warning:**
   Severe weather is occurring or is imminent. Find a safe location immediately.

   It is always a good idea when in new and strange territory, to listen to weather information on your radio or TV from time to time so that you will not be caught unaware if and when there is a sudden change in the weather.

# 4. APPLIANCES AND EQUIPMENT

Refer to the operator's manuals in the information package for more detailed instructions, if required, for each appliance, component or system.

## 4.1 REFRIGERATOR

The refrigerator in your motorhome can be operated on either:

1. 120-volt AC electric.
2. LP gas with 12-volt ignition.
3. 12 volt DC

**IMPORTANT**
**It is very important that your motorhome be level when parked so that the refrigerator will operate safely and properly.**

**CAUTION**

**If the fridge is running and the motorhome is parked off-level by 3 degrees or more side-to-side or 6 degrees or more front-to-back for more than an hour, permanent damage could be done to the refrigerator.**

When you park your motorhome, normal levelling for comfortable living will usually place it within satisfactory level limits. Use a level to make sure.

When the refrigerator is not being used for any length of time the temperature setting should be turned to the lowest level and switched to off. The door should be opened slightly to allow for air circulation and to prevent any odor or mold build-up.



*Fig. 4-1 Refrigerator*

### 4.1.1 OPERATING INSTRUCTIONS

Read the Refrigerator Owner's Manual carefully for complete instructions.

**12-volt operation -** Turn selector knob to the 12 volt symbol. Adjust Thermostat to desired temperature

**120 opertation -** Turn selector knob to the 120 volt symbol. Adjust thermostat to desired temperature

**LP operation -** Make sure the LP system is on. Turn selector knob to the gas symbol. Adjust thermostat to desired temperature.

**NOTE: Refrigerator is self starting in all operation positions.**

### 4.1.2 SHUTTING DOWN

To shut off the refrigerator, refer to the refrigerator manual. If the refrigerator will not be in operation for a period of weeks, it should be emptied, defrosted, cleaned, and the door left ajar. Use the travel latch to lock the door in that position.

**CAUTION**

**DO NOT store explosive substances in the refrigerator, such as lighter fluid, petrol, ether or the like.**

### 4.1.3 OPERATING TIPS

1. The refrigerator should be cold before placing items in it.
2. Try not to put warm or hot items in the refrigerator. Allow them to cool off first.
3. Do not pack refrigerator too full. To operate efficiently, the refrigerator needs air to circulate.
4. Use smaller containers to store items i.e. 1 litre rather than 4 litre.
5. Use containers that seal tightly.
6. Use crumpled paper between containers to prevent rattling while driving.

### 4.1.4 EXTERIOR REFRIGERATOR COMPARTMENT

This compartment allows access to the refrigerator for cleaning, inspection, maintenance and service. It is a good practice to open the compartment door once in a while to make sure that the area is clean and free of any debris that might hinder air circulation.



*Fig. 4-3 Open Compartment (Lower Fridge Vent)*

## 4.2 RANGE

The range operates on LP gas. It must be lit manually. Make sure that the LP switch located in the **UTILITY CENTER** is on.

### 4.2.1 LIGHTING BURNERS

1. Turn the burner control knob to "**ON**".
2. Light manually with striker.
3. Adjust the level of the flame by turning the control knob.

**IMPORTANT**
**Make sure stove is shut off when not in use.**



*Fig. 4-4 Range*

### 4.2.2 SAFETY TIPS

1. Always wait 5 minutes before relighting range to allow gas to dissipate.
2. The range is not designed for and should never be used as a space heater.
3. Do not operate range while travelling or while refuelling your vehicle at a gasoline service station. The burners may ignite gasoline fumes.
4. Do not leave the top burners on without a utensil for any length of time. Overheating the grates may cause the porcelain enamel to crack and chip.
5. Anytime the range is in operation, the roof vent should be turned on to ensure proper ventilation.
6. **Do not** remove the labels on the stove top lid.

**⚠ WARNING**

**Never use the range burners to heat the interior of your motorhome. Heed the warning label in the cooking area. Always make sure you have adequate ventilation when the burners are operating.**

**⚠ WARNING**

**Light immediately after turning the burner on to prevent a gas build-up. Excess gas can cause a flare-up when lit.**

## 4.3 MICROWAVE

See the microwave manual in your information package for full instructions and safety information specific to your unit. The microwave/water heater switch needs to be the microwave position to turn the microwave on.



*Fig. 4-5 Microwave Oven*
*Microwave Convention (OPTIONAL)*

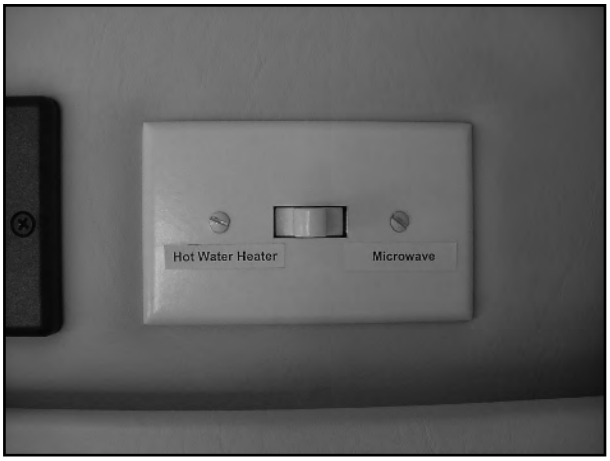


*Fig. 4-6 Microwave/Water Heater Switch*

## 4.5 ELECTRIC SIDE ENTRY DOOR STEP

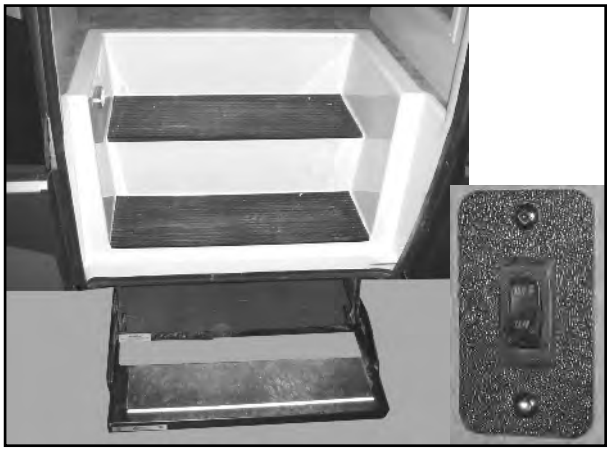

*Control Switch located on side entry wall.*

## 4.6 LP GAS FURNACE

The furnace should not be operated when the vehicle is underway, and the LP gas should be turned off at the LP shut off switch located in the **UTILITY CENTER.**

The furnace has no pilot light but is ignited by a direct spark ignition system. No manual lighting is required.

1. **To Start Up:**
   a. Make sure LP switch located in the **UTILITY CENTER** is in on position.

   b. Set thermostat to desired temperature. If set above 4 degrees of the current room temperature, the blower will come on.

   c. After about 30 seconds, the automatic ignition device will light the burner. Do not attempt to light the burner manually.

   d. There should be warm air coming from the heating ducts. If the burner fails to light, check for propane level at monitor panel to ensure there is propane in your tank. *Refer to page 6-1 figure 6-1.*

   e. If there is propane in the tank and the burner fails to ignite, double check to be sure LP switch is in the “on” position. Also, double check for propane level. If the furnace still fails to light, turn the thermostat to the off position, close the LP gas tank valve and contact your dealer or a local RV service center.

**IMPORTANT**
**After the initial start-up the furnace will automatically cycle on and off as it delivers the required heat. The thermostat should be in the heat position.**

2. **To Shut Down:**
   a. Slide the switch to the off position.

   b. Turn off the LP switch located in the **UTILITY CENTER.**

For additional information and instructions, refer to the furnace manufacturer's manual.

**The furnace is controlled by the thermostat located in front of the rear passenger side window.**




***Fig. 4-8 Thermostat***
May not be exactly as illustrated.

# 4.7 ROOF AIR CONDITIONER WITH HEAT STRIP OR HEAT PUMP

## 4.7.1 COOLING

The roof air conditioner is controlled by the thermostat, *see Figure 4-8* on opposing page. Move the thermostat switch to the “cool” position. Adjust the temperature below the room temp. The A/C will automatically turn on. The fan speed switch on the thermostat controls the A/C fan.

**NOTE:**
The air conditioner **can only** be run on 110V current with shore-line or generator power.



***Fig. 4-9 Air Conditioner***

## 4.7.2 HEAT STRIP OR HEAT PUMP

The air conditioner has built in heat capabilities designed to take the chill out of the air. To turn on the heat strip, turn the thermostat to the "Elec Heat" position and set the temperature 3 to 4 degrees above room temperature.

## 4.7.3 MAINTENANCE

We recommend that the filters be cleaned or changed at least every two weeks when the air conditioner is in operation. Do not operate your air conditioner without the filter installed.

**Cleaning and/or Changing Filters:**

a. Remove the filters depressing both retainer clips.

b. Remove filters and wash them in warm soapy water. If they are excessively dirty, replace them with new filters.

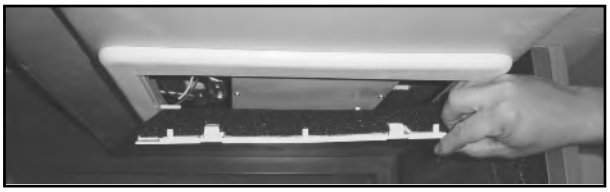

***Fig. 4-10 Filter Removal***

## 4.8 POWER ROOF VENT

Each motorhome is equipped with a roof vent to provide a controlled air flow through the vehicle. Use the vent fan in conjunction with an open window to provide a flow of fresh air into the unit.

Use these controls:

1. **ON/OFF Fan Speed:**

   **Fantastic Fan**
   This 12 volt Fantastic Fan provides for proper ventilation, comfortable temperature control and just good all-around desirable airflow. It is also used with the shower and toilet. Open a window to allow for maximum air flow. Windows farthest away from the fan provide the best air exchange. Windows should be open sufficiently to allow proper circulation of air.

   The roof vent must be open at least 3 inches or the internal safety switch will prevent the fan from coming on. This 4 position rotary switch controls the power to the fan and the fan speed. Turn the switch to its most counterclockwise position to turn the fan off. Turn the switch to its first, second or third clockwise detents (Position 1, 2 and 3 respectively) to set the fan speeds at low, medium or high.

2. **Thermostat Operation**
   Select desired temperature or comfort level on thermostat. Fan motor will now start and stop automatically as interior temperature of coach exceeds or drops below selected level.

3. **Vent Height:**
   This knob controls the position of the vent hood. Turn the knob clockwise to pull the hood down and close it. Turn counterclockwise to raise or open the hood.

4. **Cleaning Instructions:**
   1. Turn fan motor off.

   2. Remove 8 painted flathead Phillips screws around perimeter of screen insert only.

   3. Clean screen with soap and water solution and reinstall.

**NOTE:**
**See Fantastic Vent operators guide for proper operation of the optional vent with rain sensor.**

**NOTE:**
Never place a Maxxair TM style cover or filter on ceiling fan. This greatly restricts air flow and increased sound levels will occur.



**Inside**



**Outside**

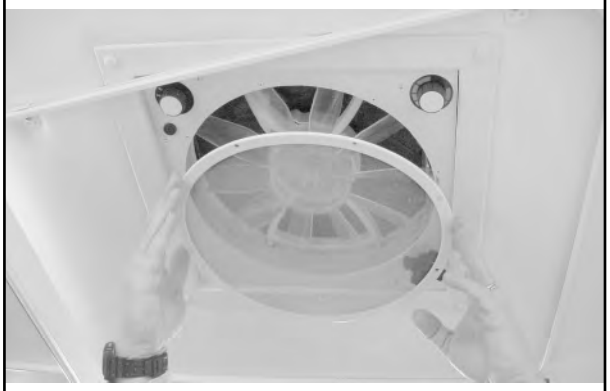

**Removing Painted Screws**

*Fig. 4-11 Roof Vent*

# 4.9 WINEGARD ANTENNA

## 4.9.1 CABLE HOOK-UP

The outside cable connection is located in the utility center (driver side rear). You will need to turn off the antenna booster to watch cable TV.



*Fig. 4-12 Antenna Booster*

## 4.9.2 ANTENNA OPERATION

**To Raise Optional Winegard Crank-up Antenna:**

Turn elevating crank (clockwise) in "UP" direction about 13 turns or until resistance to turning is noted. Locate the antenna booster in the passenger side overhead cabinet above the passenger seat. *(Fig. 4-13)* This switch must be turned on to operate antenna.

**Rotating Antenna for Best Picture:**

Make certain the antenna is in the up position. Pull down on the round directional handle until it disengages ceiling plate. Rotate for best picture.

**Lowering Antenna for Travel Position:**

Pull down on the round directional handle until it disengages from the ceiling plate and rotate until pointer on directional handle aligns with pointer on ceiling plate. Turn elevating crank (counter clockwise) in "down" direction about 13 turns or until resistance is noted. Antenna is now in travel position.

**Do's**

1. Check parking location for obstructions before raising antenna.
2. Carefully raise, lower and rotate - if difficult, check for cause.
3. Rotate slowly when selecting station and check fine tuning on TV set to make sure it is properly adjusted.
4. Lower antenna before moving vehicle.

***Don'ts***

1. Force elevating crank up or down, check for cause of trouble.
2. Rotate directional handle hard against stops.
3. Travel with lift in up position.
4. Leave lift part way up or down.
5. Apply sealing compound or paint over top of base plate or anywhere on lift.

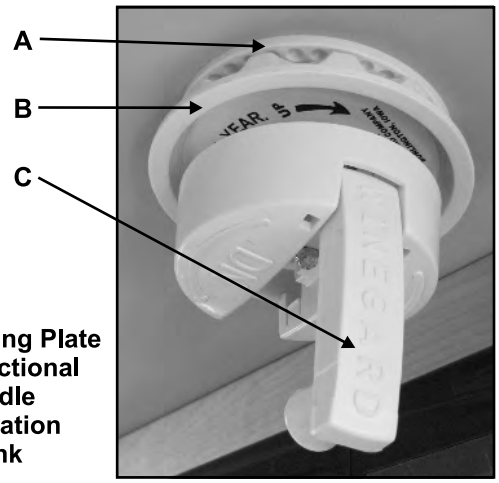


**A. Ceiling Plate**
**B. Directional Handle**
**C. Elevation Crank**

*Fig. 4-13 Antenna Adjuster*

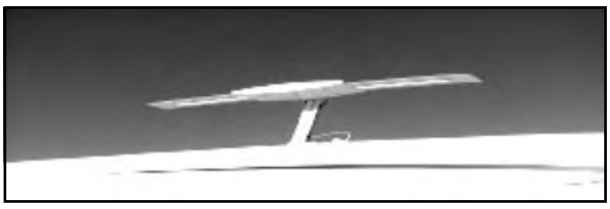

*Fig. 4-14 Antenna Raised Position*

## 4.10 TV/DVD

### 4.10.1 TV OPERATION

To operate TV refer to your TV operators manual.



*Fig. 4-15 Rear TV*




***Cable TV Connection Located in the utility center***

### 4.10.2 DVD OPERATION

All Serenity & Libero models are equipped with DVD player feature in coach radio. (Fig. 4-16) For detailed operation instruction please refer to your coach radio operator's manual.

Coach radio/DVD player, phone jack and RCA hookup is located in the driver's side front overhead cabinet.



*Fig. 4-16 Coach Radio/DVD Player*



*Fig. 4-16 In dash Radio / DVD / Nav (optional).*

# 5. AWNING OPERATION

**To Extend Awning**

1. Open awning using supplied awning crank. *(Fig. 5.21)* Avoid unnecessary stress on the awning and the vehicle by proceeding to step 2 and allowing the legs to help support the awning before you continue unrolling it.

2. Unscrew the leg *(Fig 5.22)* to allow its sliding out of the front profile *(Fig. 5.23)*. Take the leg near its hinge-joint and pull it in a horizontal direction, by this action the hinge will come out of the front profile and the leg will swing down and slide out. *(Fig. 5.24)*

3. Proceed to unroll the awning the rest of the way. After unrolling the awning completely, fix the legs at the chosen height. *(Fig. 5.25)*

4. Legs may now be fastened to the ground using provided hooks *(Fig. 5.26)* or you may attach the legs to the wall brackets which are mounted to the side of the van. *(Page 5-2 Fig. 5.27)*

5. Adjust awning so that one side is lower to allow rain water to drain. When this adjustment is made check to assure that the cargo doors do not interfere with the awning.

**CAUTION**

**Ground stakes will not prevent the awning from moving in the wind.**

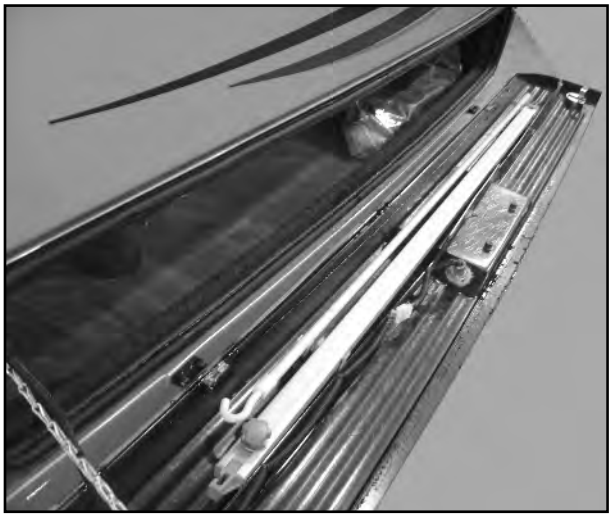

***Awning crank, arm and center support arm location (Rear storage compartment)***

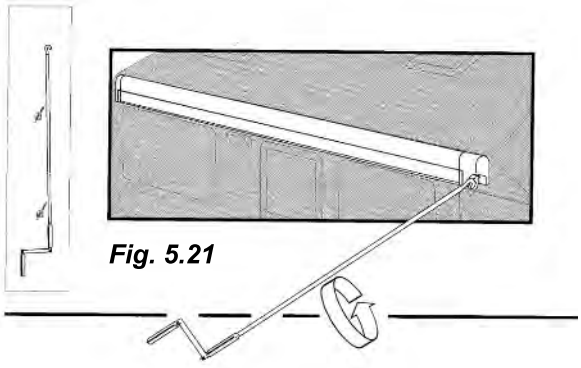

***Fig. 5.21***

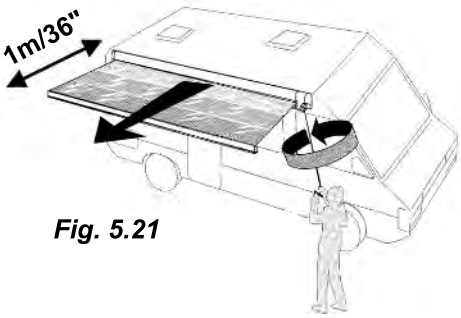


***Fig. 5.21***

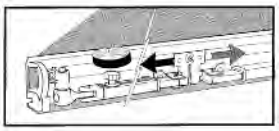

***Fig. 5.22***



***Fig. 5.23***

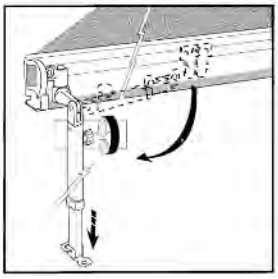

***Fig. 5.24***



***Fig. 5.25***

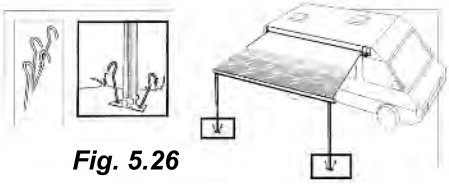

***Fig. 5.26***

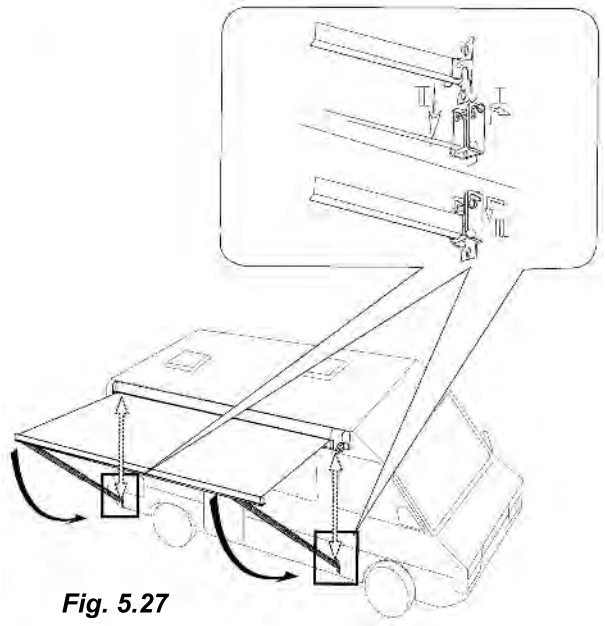

*Fig. 5.27*

**CAUTION**

**The awning is a sun protection, in the event of severe weather conditions, awning should be closed to prevent damage. The effects of wind and rain on any awning are unpredictable. Severe damage to the vehicle and/or the awning may result and cannot be covered by warranty.**

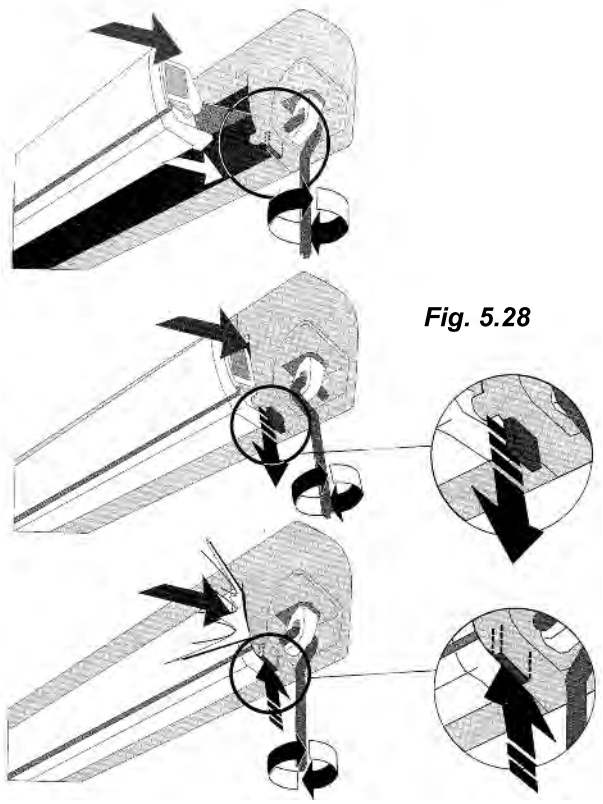

*Fig. 5.28*

**To Retract Awning**

1. To close the awning reverse the previous steps. Make sure that the red indicators are no longer visible when the awning is completely rolled up. *(Fig. 5.28)*

**IMPORTANT**
**Remove ground pins before retracting awning.**

**IMPORTANT**
**For further instruction or troubleshooting refer to the Fiamma awning instruction booklet supplied with your van.**

# 6. ELECTRICAL SYSTEMS

Your motorhome is equipped with two electrical systems operating on separate voltages - a 12 Volt DC System and a 120 Volt AC System.

The 12 Volt DC System draws its power either from the engine's charging system while driving or from the coach battery when parked. An isolator separates the two battery systems to prevent the engine battery from being drawn down when parked and the coach system is in use.

The 12 volt system operates from the rear battery, from shore power through the converter, from the generator through the convertor. The battery is being charged when the unit is plugged in, the engine is running or when the generator is running.

The 120 volt AC System operates either from the optional 120 Volt generator installed in your motorhome or from the outside shoreline connection.

Refer to the instructions in the information package for more details.




***Fig. 6-1 Electrical Panel***

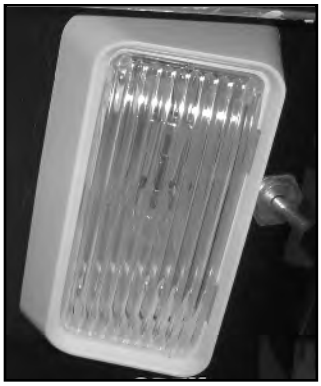

***Fig. 6-1A***
***Exterior Light***
***(Utility Center)***

## 6.1 SYSTEM MONITOR

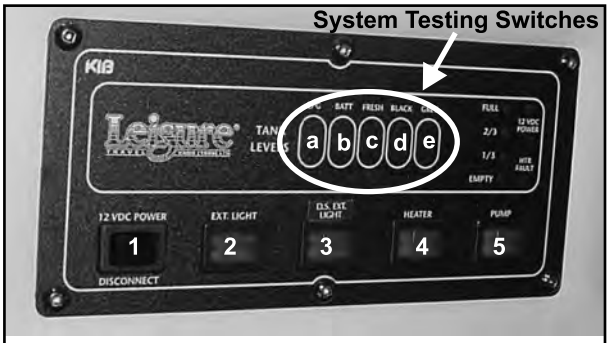


**2 Position Rocker Control Switches**

***Fig. 6-2 Monitor Panel***
***(Located on overhead in wardrobe closet)***

1. **12 VDC Power Disconnect :**
   This switch allows you to shut down all auxiliary battery power.
2. **Exterior Light:**
   This switch controls the exterior "porch" light.
3. **Exterior Light (driver's side):**
   This switch controls the exterior "porch" light located in the Utility Center. *(Fig. 6-1a)*
4. **Water Heater:**
   This switch controls the power to the water heater. Turn the switch to the right to turn the water heater on and to the left for off. Switch light will be on when the switch is in the ON position.
5. **Water Pump:**
   This switch controls the power to the water pump. Turn the switch to the right to turn the water pump on and to the left for off. Switch light will be on when the switch is in the ON position.

**TESTING SYSTEMS**

These switches control the power to the monitor test functions. Depress each switch and hold to check the adjacent system lights:

a. **LP Gas Tank**
   Measures LP gas remaining in tank.

b. **Battery Condition:**
   Displays the battery power level.

c. **Fresh Water Tank**
   Display fresh water tank level.

d. **Black Water Holding Tank:**
   Displays black water tank level.

e. **Grey Water Holding Tank:**
   Displays grey water tank level.

## 6.2 INTERIOR COACH LIGHT SWITCHES

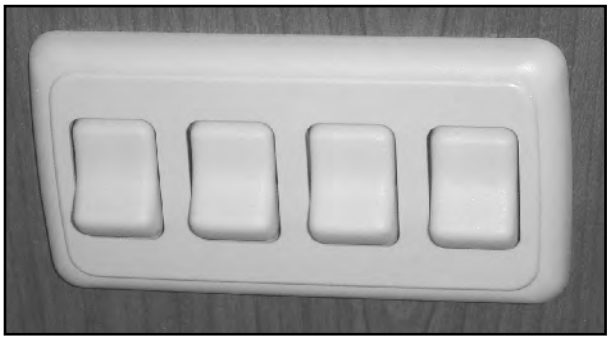

***Located on side entry wall - NOTE: 12-volt VDC power must be on to operate coach lights.***

## 6.3 CONVERTER

The converter converts power from A/C 110 volts to DC 12 volts for 12 volt features and charges the rear battery.

It is located at the front of the kitchen cabinet.

### 6.3.1 CONVERTER MAINTENANCE

There are no parts in a converter that require any routine servicing or adjustment.

The converter contains a number of safety devices:

- Fluctuations of temperature or power usage are automatically monitored.
- A sensor that eliminates damage to the converter if the terminals are “short circuited”.
- If the battery is connected backwards the two 30 amp fuses will blow. *(Fig. 6-3)* If this occurs hook up the battery correctly before replacing the fuses.

If your appliances fail to function, check the fuses located under the kitchen cabinet . The sofa has a reset button within the fuse panel. The converter itself has two 30 amp fuses. To access these open the panel.

The converter is turned on when 120 volt power is available. If 120 volt power is not available, the normal 12 volt power requirements will run down the batteries.

Refer to manual in the information package for more detailed instructions.

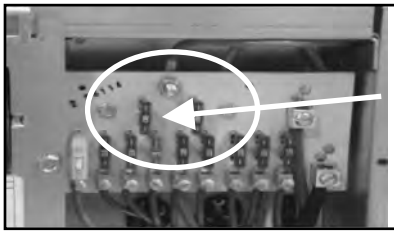

**Two 30 AMP Automotive Fuses**

***Fig. 6-3 Converter Fuses***

## 6.4 120-VOLT AC SYSTEM

When connected to an outside electrical utility such as that provided by most campgrounds or when running your 120 volt generator, the converter charges the coach battery which provides 12v power. All equipment that normally is powered through the battery system is then powered through the converter preventing drain on the battery.

Some equipment, however, depends entirely on 120 volts from an outside connection or from the optional 120 volt generator. These include:

1. Roof Air Conditioner
2. Refrigerator (when set to 120 volt)
3. Microwave Oven
4. All 120 Volt Electrical Outlets

There is one reset breakers for the 12 volt charging system at the converter. *(Fig. 6-4)*

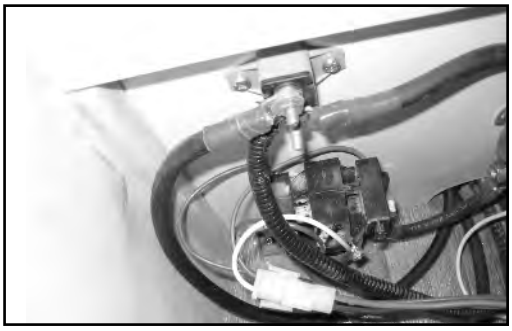

***Fig. 6-4 50 AMP Breaker (Located under driver side front dinette)***

### 6.4.1 EXTERNAL POWER CORD (SHORELINE)

The external utility power cord (also called the “shoreline”) is stored in the drivers side front outside storage compartment.

To connect your motorhome to an external power source, pull the cord through the cord hatch and plug it into the proper receptacle. Your motorhome is equipped with a 30-amp shoreline service.

**⚠ WARNING**

**Do not connect the external power cord until you have checked with the owner/attendant of the campground as to proper polarity and grounding. Improper grounding or reverse polarity can cause component failure, injury or death.**

## 6.4.2 120-VOLT CIRCUIT BREAKERS

The left side of the breaker panel contains six switches, which are 120 volt system circuit breakers. The right side houses 12 volt fuses, and will be discussed later.

The breaker panel protects all 120-volt equipment and components in the motorhome from overload, from a short in the wiring or a short in the component itself. This cuts off the flow of electricity in the system and prevents damage or fire.

If a breaker "trips", allow a brief "cool down" period and then reset the breaker by turning it OFF and then ON. If a breaker "trips" again and again, this could mean that there is a short in the wiring or in the equipment and both should be checked and serviced.

Refer to Converter and control panel manuals for more information.

There is a single 30 Amp main breaker which protects the entire electrical system. This breaker should be checked first if the entire electrical system will not function on shore power.

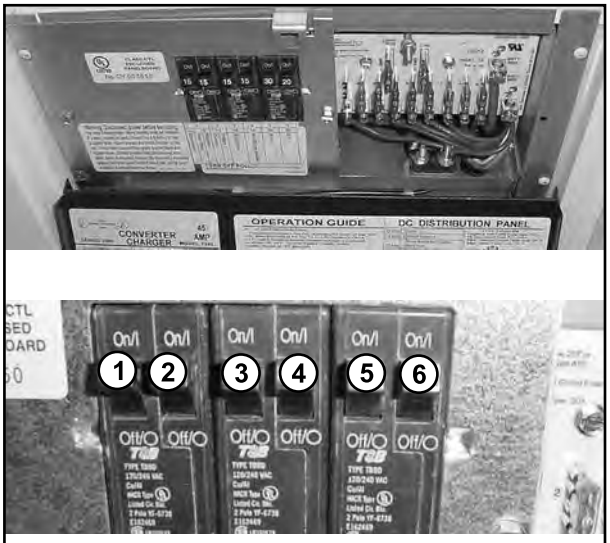


**Breaker Layout**

**FREEDOM II**

| | 1 | | | 2 | | 3 | 4 | 5 | 6 |
|---|---|---|---|---|---|---|---|---|---|
| **AMP** | **15** | | | **15** | | **15** | **15** | **30** | **20** |
| | CONVERTOR | REAR PLUG | KITCHEN | OUTSIDE | FRIDGE | APPLIANCE | MIC/WATER HEATER | MAIN | A/C |

**110V Breaker Label**

***Fig. 6-5 Power Panel***

## 6.4.3 GROUND FAULT CIRCUIT INTERRUPTER (GFCI)

Various outlets in the motorhome, particularly those near sinks and water supplies, are connected to a GFCI which is a very sensitive circuit breaker that will protect you from electrical shock if a severe ground fault develops. If and when this breaker trips, unplug all appliances on that circuit and press the reset button on the outlet.

If the GFCI keeps tripping check and repair the electrical system before using it again.

Refer to Converter and control panel manuals for more information.

Depending on the floor plan in your vehicle, you will find a GFCI outlet in the bathroom and outside recepticle.

All outlets are protected on the U. S. system.

If the fridge or convenience plug have no power and the breaker is on, check to see if the GFCI on the outside plug has tripped as they are on the same circuit.



***Fig. 6-6 GFCI Outlet (Typical)***

**WARNING**

**The GFCI will not eliminate completely all electric shock. Small children or persons with a heart condition should be extra cautious and could still be injured even though protected by a Ground Fault Interrupter.**

## 6.5 AUXILIARY LP GENERATOR (OPTIONAL)

Refer to the Generator Owner/Operator's Manual for more detailed instructions.

### 6.5.1 GENERATOR OPERATION

1. **Controls:**
   The generator switch is located on the overhead in the wardrobe closet.

**IMPORTANT**
**The generator starter draws current from the coach batteries so the ignition does not have to be on.**

2. **Starting:**
   a. See Generator Manufacturer's Manual for specific instructions.

   b. Open LP valve at the switch on the monitor panel

   c. Press generator start button, hold until engine is running, then release.

   d. Allow the engine on the generator to start and run smoothly before operating electrical appliances.

   e. Be familiar with the output capacity and capability of your generator.

   f. Be careful not to overload the generator. See your manual for information on this.

3. **Stopping**
   a. Press and hold stop button until generator has completely stopped.

**CAUTION**

**Overloading the generator for long periods of time can cause high temperatures that could result in damage to the generator windings. Keep electrical loads within the wattage ratings.**

**IMPORTANT**
**Check the oil level regularly during frequent use of the generator. Refer to the Manufacturer's Manual for specific information.**

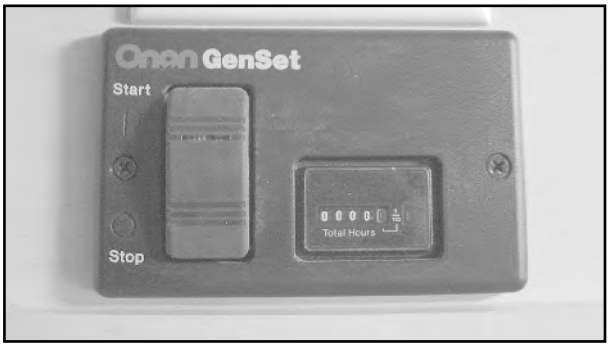


*Fig. 6-7 Generator Control*
*(Located on overhead in wardrobe closet)*

**WARNING**

**Do not smoke when refuelling. Keep flames, sparks and smoking material away from fuel or flammable fumes.**

### 6.5.2 GENERATOR SAFETY

1. **Electrical:**

**WARNING**

**Extreme care and caution should be exercised when handling the generator and its components. Carelessness can be dangerous and even fatal.**

**Never touch any electrical leads, equipment or appliances when you hands are wet or when you are standing on wet ground or in water.**

**Any repair of the generator should be done by authorized service centers only. Never attempt to repair it yourself.**

**WARNING**

**Never check generator oil level while generator engine is running.**

2. **Asphyxiation:**

**WARNING**

**All internal combustion engines produce carbon monoxide (CO) gas fumes when running. This gas is poisonous, colorless, odorless, tasteless and lighter than air. These gases can readily be drawn into your motorhome. Take the following precautions when running any engines.**

a. Do not run the generator and a ventilator fan at the same time. This could draw gases into the motorhome.
b. Do not open windows or ventilators on the side where exhaust pipes are located.
c. Park so that winds will carry gases away from the vehicle. Be aware of potential gas fumes from other nearby vehicles.
d. Do not operate the generator if there is any obstruction such as vegetation, snow, buildings, etc. which could deflect gas fumes under or into the motorhome.

## 6.6 AUTOMATIC POWER TRANSFER SWITCH

**Automatic Switch Over**

Switch from power cord to generator simply by starting generator.

**Built-in Delay**

20 – 30 second (nominal) delay prevents starting generator under load. Allows necessary engine warm-up before transfer.

This switch automatically transfers power when switching between 110 volt shore power and generated power. It prevents damage to any circuitry should the shore power and generator be used simultaneously.

**CAUTION**

**In normal usage it is never advisable to start generator under load. To prolong the life of air conditioner, microwave, etc. (and this power switch) follow this rule: ALWAYS CHECK THAT APPLIANCES ARE OFF BEFORE STARTING OR STOPPING GENERATOR.**

## 6.7 12 VOLT DC SYSTEM

The DC voltage system in your motorhome consists of two separate and yet connected battery systems:

1. The automotive battery.
2. The auxiliary or motorhome battery.

### 6.7.1 AUTOMOTIVE BATTERY

The automotive battery operates the starter, the automotive accessories and all the controls found on the instrument console. Included are the auto heater fans, the exterior lights, the horn, speed control, windshield wipers, etc..

It is recommended that the automotive battery cables be disconnected when parking for an extended period of time.

**IMPORTANT**

**Removing battery cables from the automotive (chassis) battery can clear the engine/ transmission logic modules. These modules will recalibrate themselves once the vehicle is reconnected and the engine started.**

### 6.7.2 COACH BATTERY

This will supply power to all the 12-volt lights and equipment in the living area of your motorhome. Included in this would be the roof vent, refrigerator, 120-volt generator starter, water pump, furnace fan, interior lights, holding tank and water level gauges, etc.

**Standard Coach Batteries** - *See Exterior Feature Identification Page 1-5.*



### 6.7.3 BATTERY CONDITION METER

On your monitor panel you will find a gauge which shows you the level of charge of your auxiliary battery.

## 6.7.4 BATTERY MAINTENANCE

Automotive batteries are reservoirs of 12-volt electrical energy. Whenever energy is removed from the battery it has to be replaced in order for the battery to continue functioning. This energy is restored by the engine alternator whenever the engine is running or by the RV converter.

1. **Problems:**
   Two conditions can destroy the function of a battery. One is called sulphating in which a layer of sulphate crystals collects on the lead plates inside the battery. This can happen when a battery is not used for a long period of time (30 days or more) especially during warm weather. This situation requires replacement of the battery. The second is freezing. A battery must be kept at almost full charge to prevent the liquid electrolyte inside the battery from freezing.

2. **Prevention:**
   a. Disconnect the battery cables during long periods of storage.

   b. Hook up a battery charger at least once a month during long periods of storage, or plug in the coach.

3. **Long Term Storage:**
   If you do not intend to use your motorhome for a longer period of time it might be a good idea to remove the batteries from the motorhome and store them in a cool dry location on a wood or rubber pad. DO NOT store batteries on a moist concrete floor.

4. **Additional maintenance suggestions:**
   a. Check the external condition of the battery monthly. Look for cracks in the cover and case.

   b. Make sure batteries are always securely fastened down.

   c. Make sure battery clamps are tight and free of corrosion.

   d. Keep the battery and terminals clean. Accumulations of acid film and dirt may permit current to flow between the terminals and discharge the battery.

   e. To clean the battery, wash it with a diluted solution of baking soda and water to neutralize any acid present, then flush with clean water. Foaming around terminals or on top of the battery is normal acid neutralization.

**IMPORTANT**
**Make sure you don't allow any baking soda solution to get into the battery. This can neutralize the battery acid.**

   f. Dry the cables and terminals before reinstalling them, and don't use grease on the bare metal inside the cable terminals to prevent corrosion. Grease is an insulator. Electricity will not flow through it. A plastic ignition spray will protect the terminals after you have cleaned and reinstalled them.

   g. Whenever batteries are removed and replaced make sure the positive and negative cables are attached to the correct terminals. (Positive to positive and negative to negative). The same is true when using a "booster battery" or a charger. If you use a "fast charger", disconnect the cables from your battery. **Do not** attempt to recharge a frozen battery.

**IMPORTANT**
**Never try to start the engine with the aid of a Battery Quick charge unit.**

   h. If you do not have maintenance-free batteries, check the battery fluid level and fill with distilled water if necessary. **Do not overfill.**

   i. Have the specific gravity of the battery fluid checked when you have your vehicle serviced.

**⚠ WARNING**

**Do not allow battery electrolyte to contact skin, eyes, fabrics, or painted surfaces. The electrolyte is a sulphuric acid solution which could cause serious personal injury or property damage. Wear eye protection when working.**

**⚠ WARNING**

**Remove rings, metal watchbands, and other metal jewellery before working around a battery. Use caution when using metal tools. If the tool contacts the battery terminals or metal connected to them, a short circuit could occur.**

## 6.7.5 12 VOLT COACH FUSES

**The 12 volt system** are located in the driver side dinette. The right side of the electrical panel houses the 12 volt fuses. *(Fig. 6-10)*

Numbered 1–9 from left to right.

**1 -** 25 AMP Sofa
**2 -** 3 AMP CO/LP Detector
**3 -** 10 AMP 12-volt Plug RR, Cabinet Lights, Bath Light, Bath & Kitchen Fan
**4 -** 10 AMP Furnace, Thermostat
**5 -** 10 AMP Monitor Panel
**6 -** 10 AMP PS OH Lights, 12 Volt Plug Front, Winegard Booster
**7 -** 15 AMP Fridge
**8 -** 15 AMP Rear & Centre, Kitchen & DS OH Lights, Front Light
**9 -** 10 AMP Audio/Video

All 12-volt circuits are protected by either a circuit breaker or a fuse in the load centre located in lower cabinet between hot water heater access and lower storage compartment (driver's side of coach). When a breaker trips or a fuse blows, shut off all appliances or lights on the affected circuit and reset the breaker or replace the fuse with a new one of the same amperage. The label on the panel identifies both the fuse amperage and the applicable circuit. Additional fuses for the fog lights, and isolator relay are located with the fuses under the driver's seat

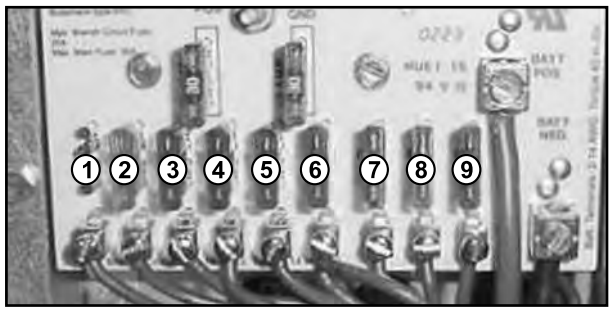


*Fig. 6-10 12 Volt Fuses*

**NOTE:**
**See chassis operators manual for chassis fuse function and location.**

## 6.7.6 12 VOLT CHASSIS FUSES

Chassis-specific fuses are located in two compartments, one is located under the driver's side seat. The other is under the steering wheel in the steering column. See the backside of the pull-off panel for fuse layout. See your chassis manuals for specific information on the chassis 12 volt systems.

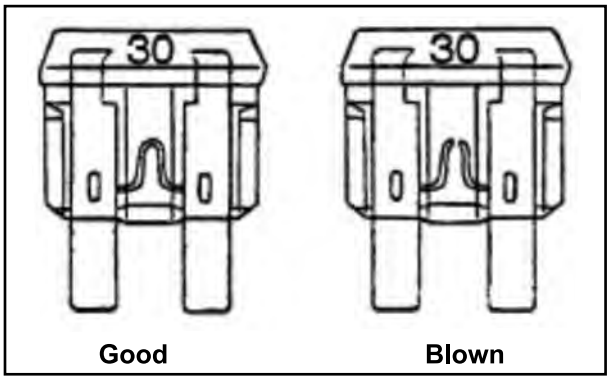


*Fig. 6-11.1 Fuse Condition*

# 6.8 ELECTRICAL SCHEMATICS FREEDOM II (STANDARD BED - 110V)

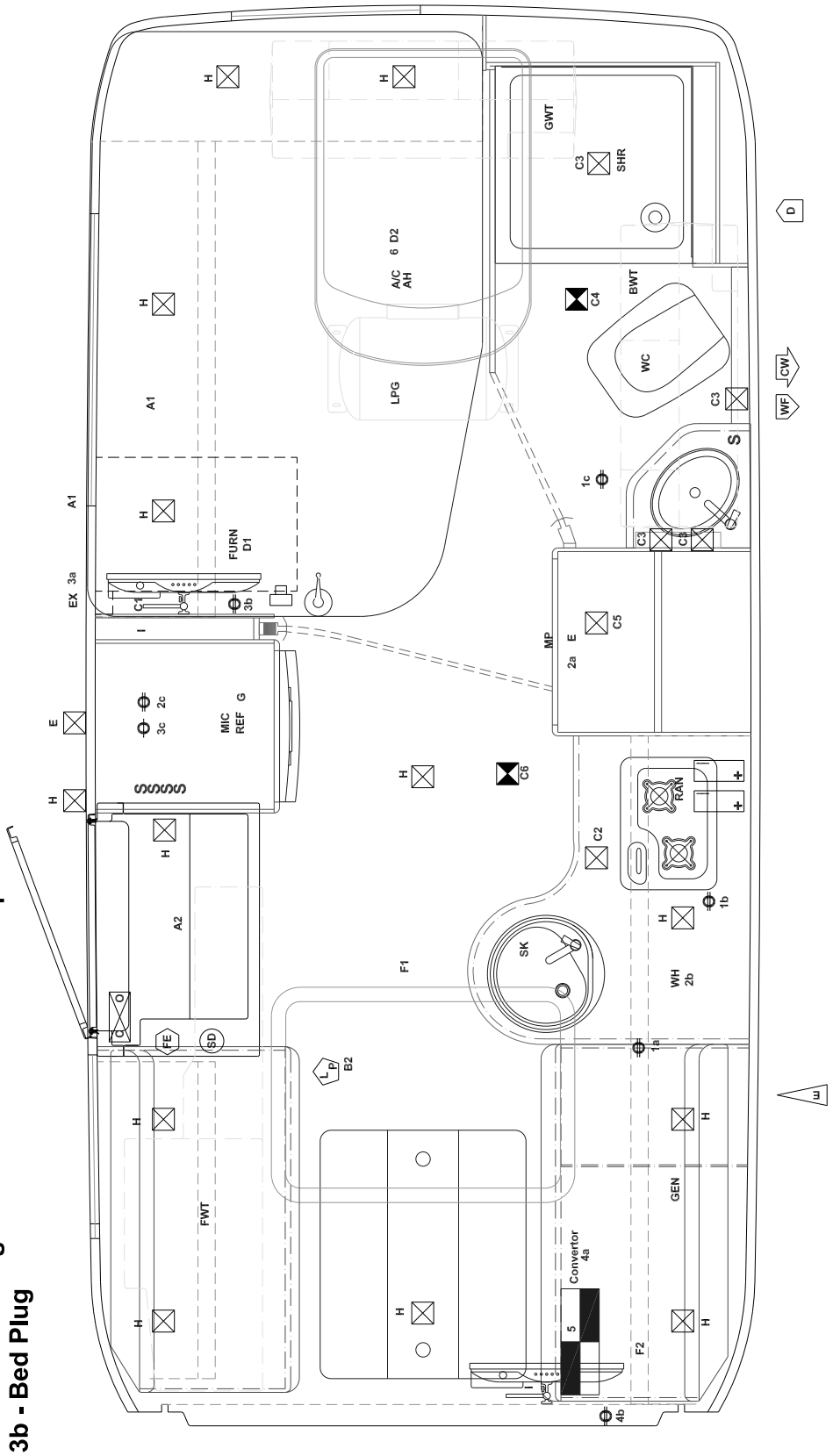

## 6.8 ELECTRICAL SCHEMATICS FREEDOM II (STANDARD BED 12V)

**COMPONENT DESCRIPTION**

**A1 - Sofa (Optional)**
**A2 - Step**
**B2 - LP Detector**
**C1 - 12 volt Plug (Rear)**
**C2 - Kitchen Cabinet Light**
**C3 - Bath Light**
**C4 - Bath Fan**
**C5 - Closet Light**
**C6 - Kitchen Roof Vent**
**D1 - Furnace**
**D2 - Air Conditioner**
**E - Monitor Panel**
**F1 - Skylight**
**F2 - 12 volt Plug (Front)**
**G - Fridge**
**H - Lights**
**I - Audio Video**

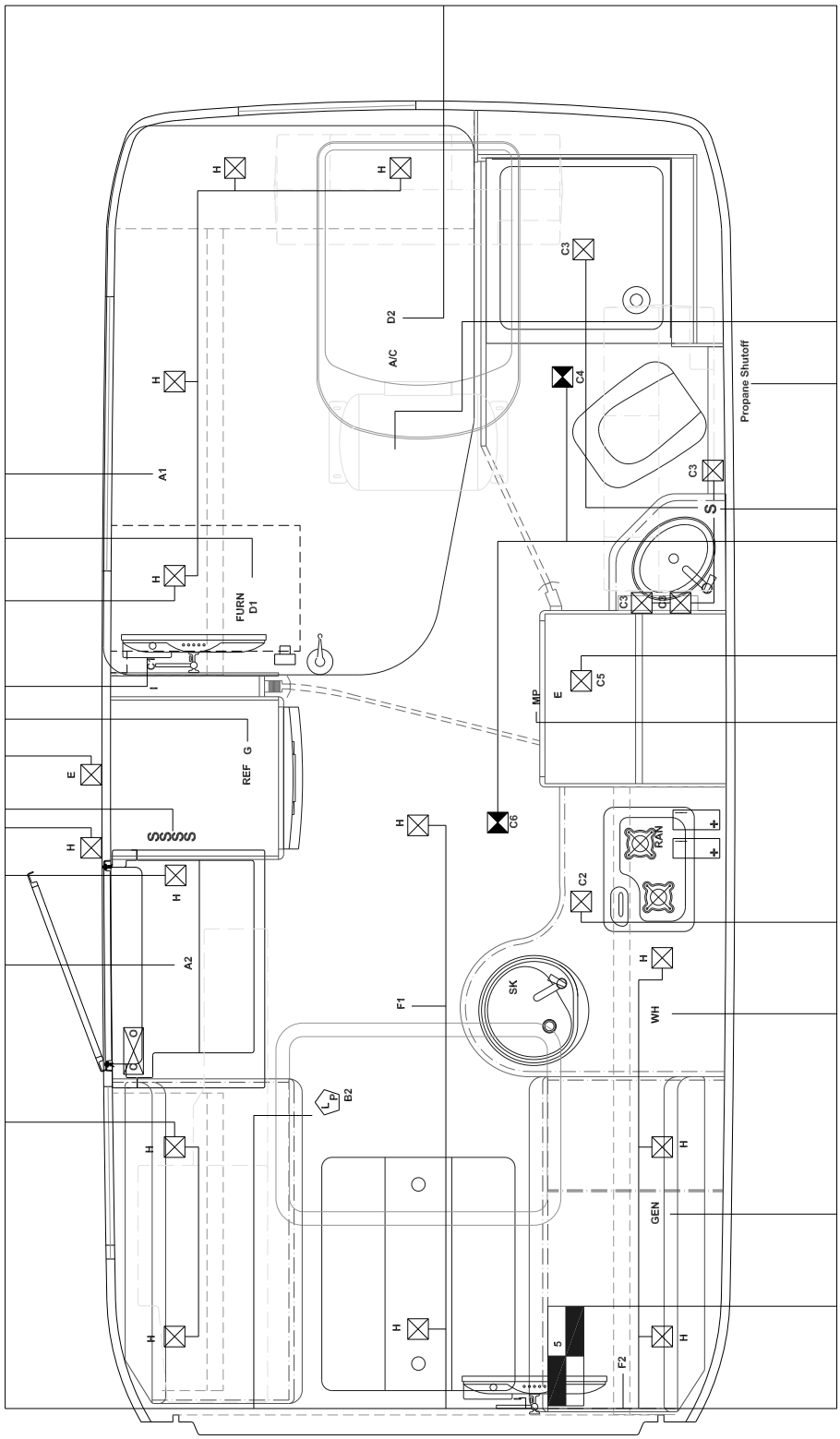

## 6.8 ELECTRICAL SCHEMATICS FREEDOM II (SOFA - 110V)

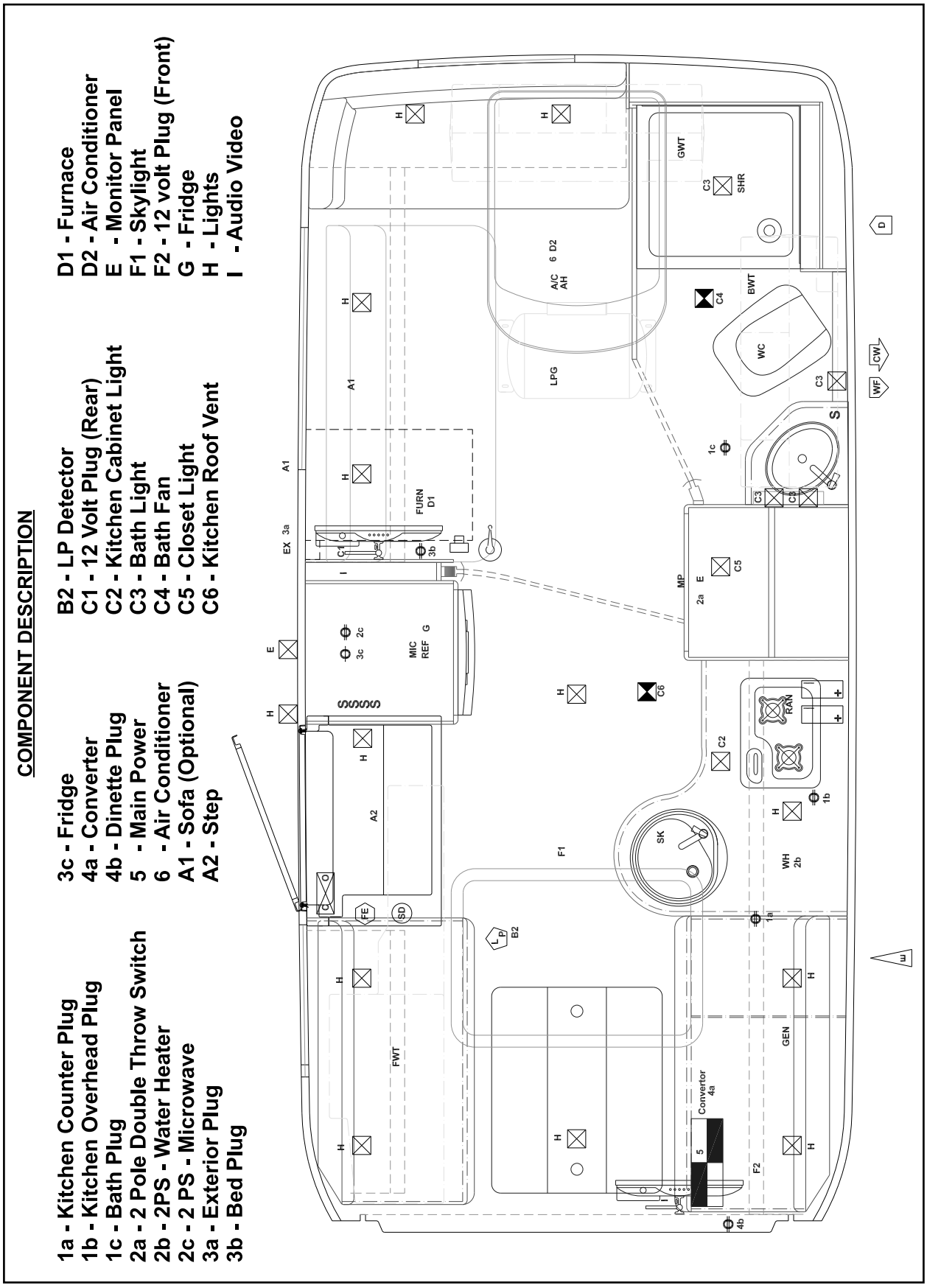

## 6.8 ELECTRICAL SCHEMATICS FREEDOM II (SOFA - 12V)

**COMPONENT DESCRIPTION**

**A1 - Sofa (Optional)**
**A2 - Step**
**B2 - LP Detector**
**C1 - 12 volt Plug (Rear)**
**C2 - Kitchen Cabinet Light**
**C3 - Bath Light**

**C4 - Bath Fan**
**C5 - Closet Light**
**C6 - Kitchen Roof Vent**
**D1 - Furnace**
**D2 - Air Conditioner**
**E - Monitor Panel**

**F1 - Skylight**
**F2 - 12 volt Plug (Front)**
**G - Fridge**
**H - Lights**
**I - Audio Video**

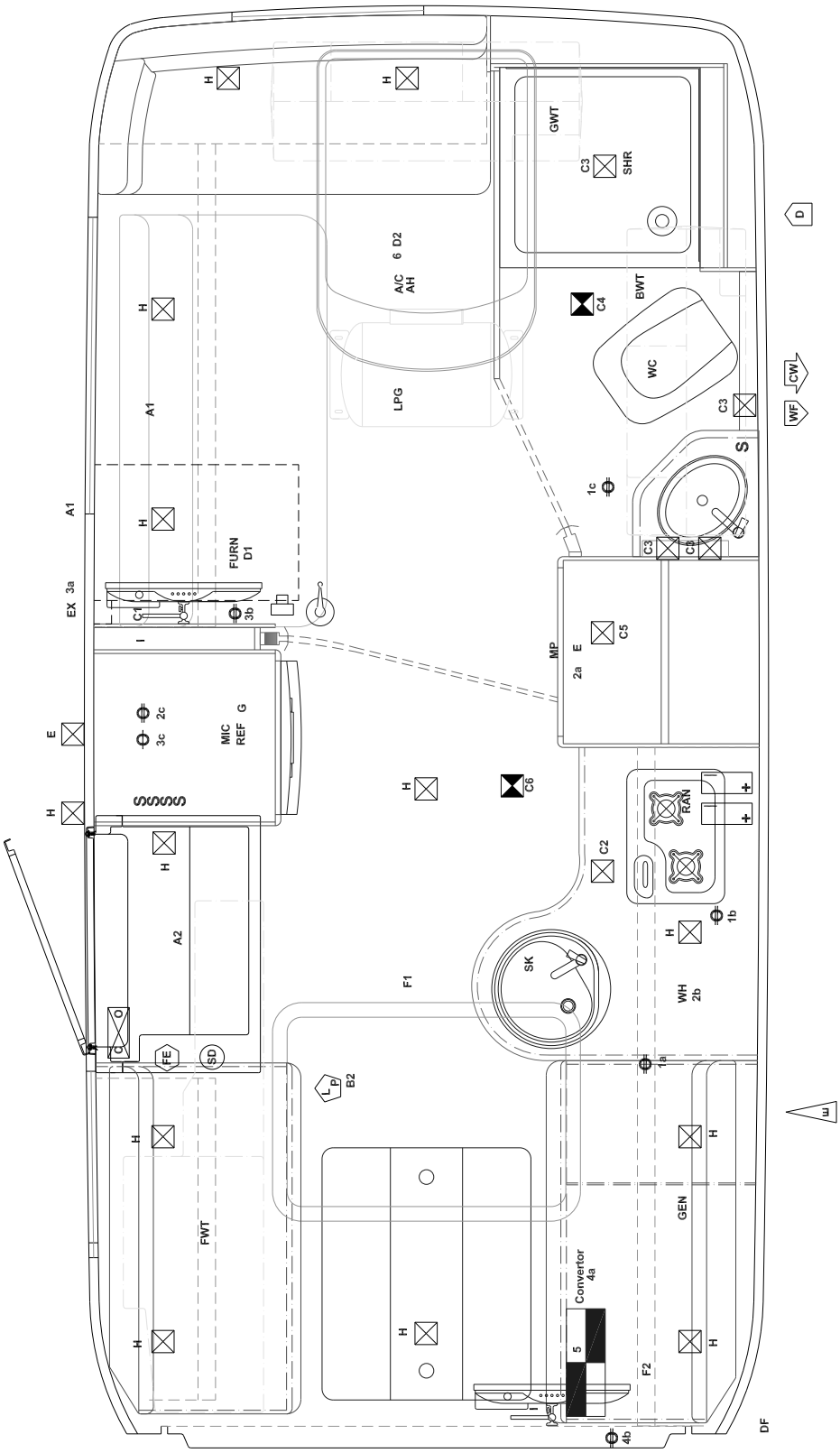

# 7. WATER/PLUMBING SYSTEM

Your motorhome is designed with a fresh water, grey water, black water and associated plumbing to handle all of the water and waste requirements. Review this section carefully to understand each system and how they function together.

## 7.1 FRESH WATER SYSTEM

There are two sources for fresh water in your motorhome:

1. A water tank located within your motorhome.
2. By connecting to "city water" by means of a water hose.

Both can supply water to the sink, shower, bathroom toilet and the water heater.

The water system built into your motorhome provides full service similar to the system used in your home. A 12-volt self-priming pump draws water from the fresh water storage tank to all cold faucets and the water heater. An automatic pressure switch, located in the water pump maintains a positive line pressure.

The fresh water connection is accessible from the drivers side of the motorhome. *(Fig. 7-2)*

A. Tank Fill

B. City Water

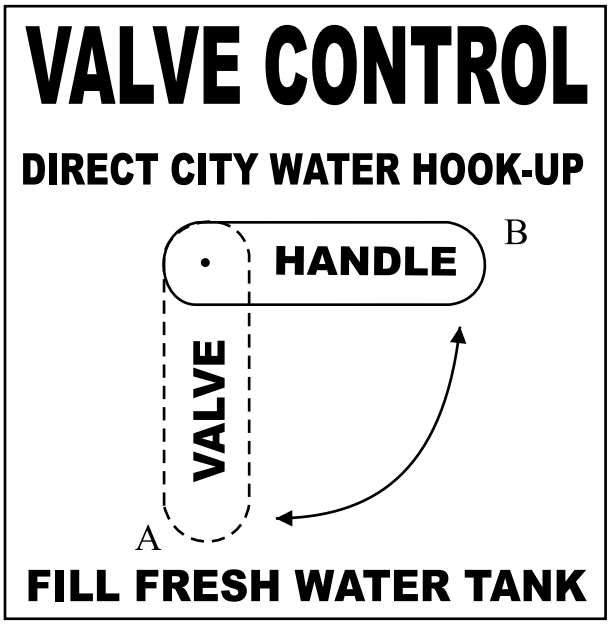


*Fig. 7-1 Valve Control Label*

### 7.1.1 EXTERNAL WATER SUPPLY

The external water source will supply your motorhome water system with water at city pressure when the water pump is switched off.

1. **Connecting:**
   a. Turn water pump switch to off.
   b. Attach garden hose to city water connection. Turn the water selector valve to city water.
   c. Turn on external water supply.

**IMPORTANT**
**After connecting to the external water supply, open the faucets in your motorhome slowly and cautiously. Air trapped in the line can cause the water to splash into the sink. You may want to drape a wash cloth over the faucet to prevent excessive splashing.**

2. Turn the water heater by-pass valves to normal to be sure that water enters the heater and hot water is available for motorhome use. *(See Fig. 7-9.)*

   Water from the external supply is prevented from entering the water tank and the water pump by means of a check-valve.

3. **Disconnecting:**
   a. Turn off the external water tap.
   b. Relieve water pressure on the line by opening a faucet in the motorhome.
   c. Disconnect hose from the motorhome.
   d. Replace the protective plug back over the water connection.




*Fig. 7-2 Water Connection*

## 7.1.2 FRESH WATER TANK FILLING PROCEDURE

**FILLING FRESH WATER TANK:**

a. Connect water hose to the city water inlet connection.

b. Open source of water supply valve.

c. Make sure the valve on the city water fill is in the fresh tank fill position.

d. Check the monitor panel inside the motorhome for levels as the tank is filling. Once the fresh water level reads full on the monitor panel turn off the water supply.

f. Turn the pump switch on the monitor panel on.

g. Slowly open the cold water tap until the water runs smoothly. Repeat with the hot water taps.

## 7.1.3 WATER PUMP

The water pump is designed to supply water from the fresh water tank to the various areas of your motorhome on demand. When a faucet is opened, the pump comes on automatically and pressurizes the various water lines. Water Pump is located drivers side front dinette, mounted to wall. *(Fig. 7-5)*

## 7.1.4 WATER PUMP SWITCH

The switch for the water pump is located on the monitor panel. When this switch is in the on position, the pump will automatically activate when any faucet, shower or toilet is being used.

It is recommended that the pump switch be turned off whenever leaving the motorhome for any period of time or while driving. A slow leak in a faucet or connection could drain both the water tank and the battery.




*Fig. 7-3 Water Pump Switch - Monitor Panel*

## 7.1.5 FRESH WATER SYSTEM DRAIN

The fresh water tank is located under passenger side with the drain cap mounted on tank. The exterior shower is used as the low point drain.

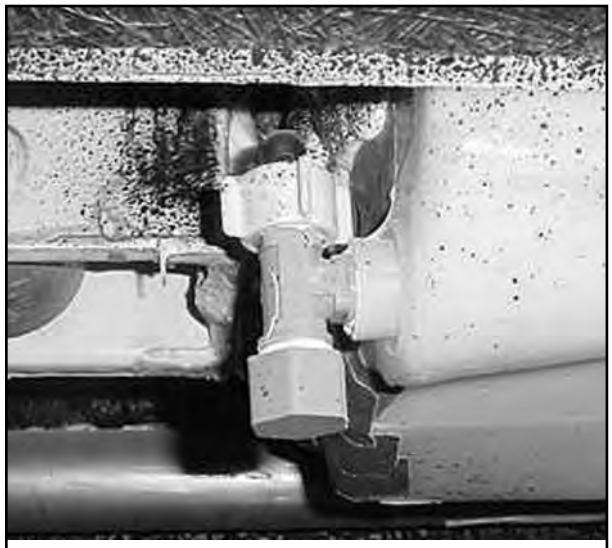

**Fresh Water Drain Valve**




**Low Point Drain (Outside Shower)**

*Fig. 7-4 Fresh Water Drains*



*Fig. 7-5 Water Pump Located in driver side front dinette*

## 7.1.6 WATER PUMP INITIAL STARTUP

1. Make sure all drain valves are closed including the water heater valve.
2. Turn water pump switch off.
3. Fill water tank.
4. Open faucets, both hot and cold.
5. Turn pump switch.
6. Close each faucet (cold and hot) as soon as water flows steadily.
7. Check to see that pump stops after all faucets are closed.
8. Pump is now ready for automatic operation. It will start whenever a faucet is opened.

## 7.1.7 WATER PUMP TROUBLESHOOTING

1. **If pump will not prime:**
   a. Make sure there is water in the tank.
   b. Make sure the battery is not run down.
   c. Make sure there are no kinks in the inlet hose.
   d. Make sure all inlet fittings and connections are air tight.
   e. Make sure water selector valve in the utility compartment is set to normal.
   f. Check for clogged lines.
2. **If water pressure drops:**
   a. Check faucets and connections for leaks.
   b. Make sure faucet aerators and filter is clean. *(Filter in Fig. 7-5)*
   c. Make sure there is water in the tank.
   d. Make sure battery is not run down.
3. **If pump runs when there is no apparent demand for water:**
   a. Make sure all faucets and fixtures are shut off and are not leaking.
   b. Check all lines for leaks.
   c. Make sure there is water in the tank.
   d. Make sure no air is trapped in the system.
   e. Make sure the tank fill water selector valve is set to normal.

**NOTE:**
**Check the screen on intake side of water pump periodically and clean or replace it at least annually to ensure proper water pressure.**

## 7.1.8 DISINFECTION OF WATER TANK

It is recommended that fresh water systems be disinfected.

1. When the system is new and has not been used before.
2. When it's been in storage for a long period of time. In case it has become contaminated.
3. **Disinfection instructions:**
   a. Prepare a solution of 1/4 cup household bleach to 1 gallon of water. Pour this solution into the garden hose; hook the garden hose to the city inlet, add 1 gallon of solution for every 15 gallons of tank capacity.
   b. Fill the tank with fresh water. Run water from each faucet, hot and cold, until you detect a chlorine odor.
   c. Leave this solution in the system for at least 4 hours. If you wish to complete this procedure in 1 hour, double the concentration of household bleach in your solution.
   d. After the time has elapsed, drain and flush the system with fresh water.

## 7.2 WASTE SYSTEMS

### 7.2.1 GREY WATER - WASTE HOLDING TANK

The drainage from the kitchen sink and shower pan is collected in a separate grey water holding tank. This tank has its own dump valve but ties into the same termination valve outlet as the waste holding tank.

**IMPORTANT**
**If grey water holding tank is allowed to overfill, the overflow may back up through the shower drain.**

Drain grey water holding tank in the same way after draining the black water holding tank. This will help flush solids out of the sewer hose.

### 7.2.2 BLACK WATER - WASTE HOLDING TANK

The black water holding tank collects all the waste from the toilet and bathroom sink. Before using your waste holding tank, deodorize it by adding one gallon water and a commercial holding tank deodorizer through the toilet.

**IMPORTANT**
**If holding tank is allowed to overfill, the overflow may back up through the toilet drain.**

### 7.2.3 DUMPING HOLDING TANKS

All Freedom II models come standard equipped with a Macerator Pump. See pump operation manual for proper instruction and operation. *(Fig. 7-6)*

**IMPORTANT**
**Holding tanks should be dumped before travelling to eliminate unnecessary weight while driving.**




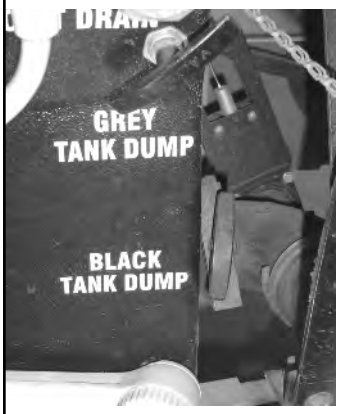


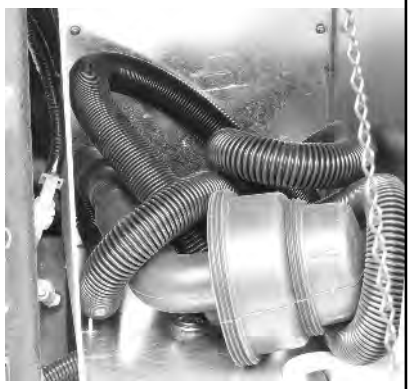





*Fig. 7-6 Drain Hose*

### 7.2.4 DO'S AND DON'TS HOLDING TANKS

1. **DO** keep your holding tank clean using any cleaner approved for recreational vehicle sanitation systems.

2. **DO** add a special deodorizer or chemical additive approved for recreational vehicle systems to sanitize and improve the tank action.

3. **DO** keep your tank termination valve closed, permitting the tank to get as full as convenient before emptying.

4. **DO** keep both the tank termination valve(s) and the drain cap tightly in place when travelling to permit use of the system when on the road.

5. **DO** use any soft, single-ply, non dyed, biodegradable toilet tissue.

6. **DO** open the bath vent to keep bathroom fresh.

7. **DON'T** put facial tissues, paper, permanent (automotive) anti-freeze, sanitary napkins, or household toilet cleansers in your holding tank.

8. **DON'T** put anything solid in your holding tank which can scratch or damage the plastic.

### 7.2.5 USING ON-SITE SEWER HOOK-UPS

When staying at a campsite for any period of time and providing that sewer hook-ups are available, the sewer hose may be attached and left in place for the duration of the stay.

However, make sure that dump valves are left closed and are opened only once the tanks are full or when you leave the campsite. This will keep solid wastes in suspension allowing them to drain with the liquids when the valves are opened. If the valves are left open, the liquid wastes will drain leaving the solids to collect on the floor of the black water holding tank.

Should this happen, close the valves, fill the tank with water and drive a few miles. A 1/4 cup of dishwater detergent added to the tank will help to clean it. The motion of the vehicle and the water will dislodge the wastes and allow the tank to be drained in the normal manner.

### 7.2.6 HOLDING TANK LEVEL INDICATORS

The holding tank levels may be checked on the monitor panel. Press the corresponding switch to check the level in each tank.

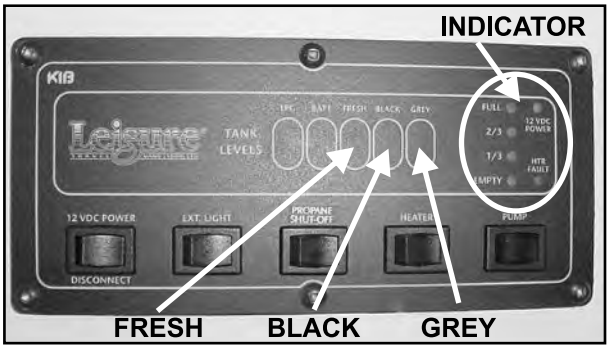


*Fig. 7-7 Tank Level Indicators*

## 7.3 WATER HEATER

### 7.3.1 WATER HEATER OPERATION

The water heater is accessible from the outside or by removing the access panel under the kitchen cabinet. All water heaters are designed to operate using LP gas or 110 power. Turn the Mic/water heater switch to water heater and the exterior switch to on, see Fig. 7-8, to operate on 110 power. To operate on LP turn the propane shut off switch to ON and turn the heater switch on the monitor panel to ON. The water heater will automatically light.

**NOTE:**
**As in Fig. 7-8 Safety Pin must be removed and switch turned on.**

**Operating Features:**

a. To fill water heater, make sure there is a water supply from the city water or fresh water tank. Turn the by-pass valves on the water heater out, so that they are pointing away from the water heater. Turn the hot water tap on at the kitchen faucet. It will take a few minutes for the water heater to fill up. Once water flows steadily at the faucet the water heater is full.

b. The water heater is equipped with a preset water temperature control. The burner will bring the water temperature up to the desired level and then automatically shut off.

c. It is also equipped with a temperature cut-off device in case the water temperature exceeds the preset limit. The breaker will trip and shut down the burner. Before the burner will restart, the breaker will have to be reset *(Fig. 7-9)*. If it continues to trip, have the unit checked and serviced. Refer to manufacturers operating instructions included in the information package.

**⚠ WARNING**

**Do not touch the heater canister and burner exhaust vent. These components are extremely hot and contact can cause serious burns.**

**IMPORTANT**
**Be sure there is water in the hot water tank to prevent burning out the heating element when the power is turned on.**

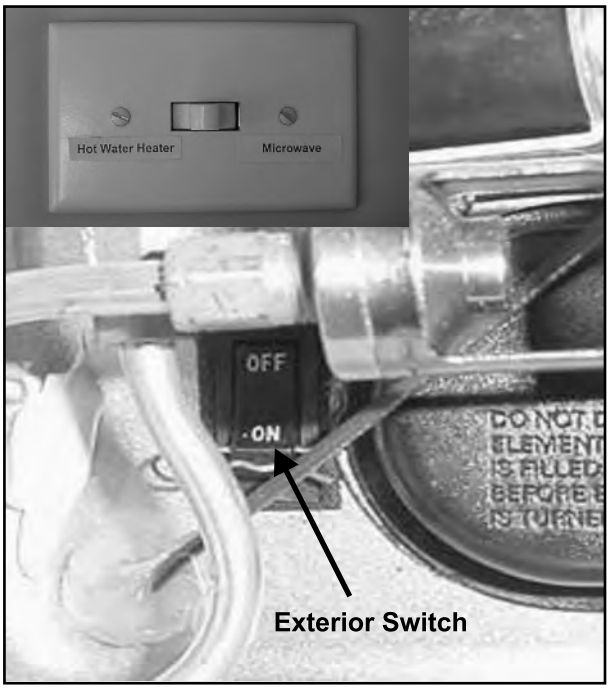


*Fig. 7-8 Water Heater 110 Volt Switches*

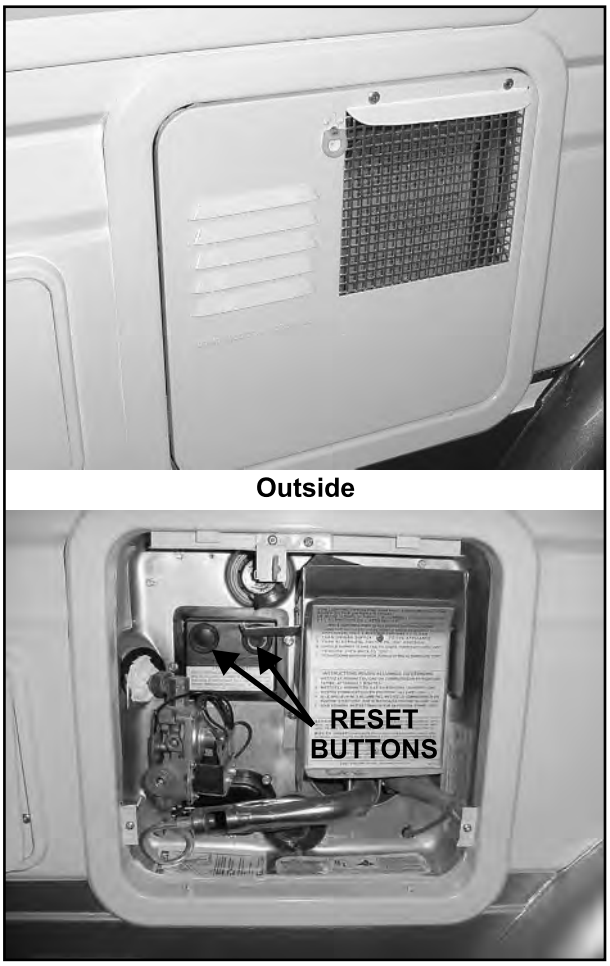


*Fig. 7-9 Water Heater*

## 7.3.2 WATER HEATER BYPASS

The water heater is equipped with a valve that sets its plumbing circuit for normal or winterize. The valve is accessible by opening the kitchen cabinet door located on drivers side interior of van, see *Fig. 7-10*. Turning the knobs on the valves to point outward diverts the flow of water into the water heater, while turning them to point along the water pipes allows the water to bypass the heater.

Refer to instruction sheet in information package for more details on winterizing procedure.

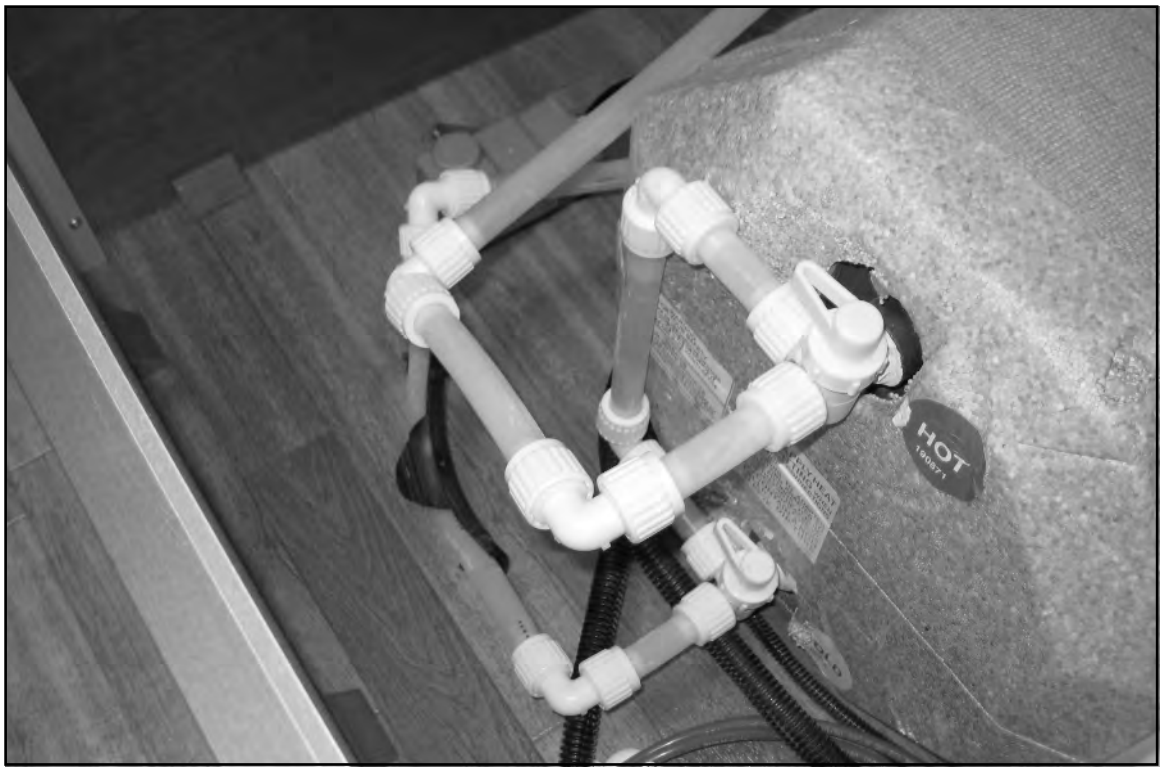


***Fig. 7-10 Water Heater Bypass Valve (Located under driver side front dinette)***

# 7.4 WATER FIXTURES

## 7.4.1 FRESH WATER TOILET

The toilet in your motorhome is very much like the one in your home except that it uses a much smaller amount of water for flushing. When the levers are moved to the right for flushing, a high velocity stream of water produces a swirl effect that should effectively cleanse the toilet. If you wish, a deodorizing agent may be used to eliminate any odors from the toilet.

1. **Flushing the toilet** *(Fig. 7-13)*:
   a. Press down and hold front center flush valve.

   b. Release the valve. A small amount of water should remain in the bowl.

For additional information and instruction, see the manufacturer's toilet manual.

2. **Operating Tips:**
   a. Do not use facial tissue or regular household toilet tissue in the RV toilet. It will not disintegrate properly and will cling to the sides and bottom of the holding tank making it hard to clean. Use only toilet tissue available at your RV center designed for use in RV toilets.

   b. Do not flush sanitary napkins or other non dissolving items down the toilet.

   c. Do not use automotive anti-freeze or caustic chemicals such as household bleach in the toilet or holding tank. These can damage plastic or rubber parts in the system.

3. **Cleaning the Toilet:**
   The toilet should be cleaned regularly for sanitation and efficient operation.

   a. Clean the toilet using a mild bathroom cleaner. Do not use caustic or abrasive cleansers. Do not allow cleaners to remain in the toilet bowl for any length of time. Plastic surfaces and seals could be damaged.

   b. Dump and rinse the holding tank after cleaning and flushing the toilet.

   c. Add a bit of odor control chemical every few days to eliminate any possibility of odor in the bathroom.



***Fig. 7-12 Toilet***



***Fig. 7-13 Flush Valve***

   d. If the operation of the flush valve becomes stiff, the toilet plunger may need to be lubricated. Keep plunger lubricated by leaving a small amount of water in toilet or turn off the water pump, drain all the water from the toilet bowl and lubricate plunger o-ring inside toilet. Operate the valve several times to make sure it is operating freely.

For instructions on preparing the toilet for cold weather storage, refer to the section on winterizing.

## 7.4.2 INTERIOR SHOWER

Your motorhome is equipped with a full shower unit. Pull the sliding curtain to close shower.

**NOTE:**
**Be sure to switch on the roof vent when using shower to remove excess humidity.**



*Fig. 7-14 Interior Shower*

## 7.4.3 EXTERIOR SHOWER

Your unit is equipped with an exterior shower unit, located in the utility center on the drivers side rear.

1. **Hot Water:**
   This standard water tap controls the flow of hot water to the shower head. Turn clockwise to turn off and counterclockwise to turn on.

2. **Cold Water:**
   This standard water tap controls the flow of cold water to the shower head. Turn clockwise to turn off and counterclockwise to turn on.

3. **Shower Head:**
   This standard flexible hose shower system is mounted in the compartment. Turn the handle and lift the head to use it.




*Fig. 7-15 Exterior Shower*

## 7.5 PLUMBING SCHEMATIC FREEDOM II

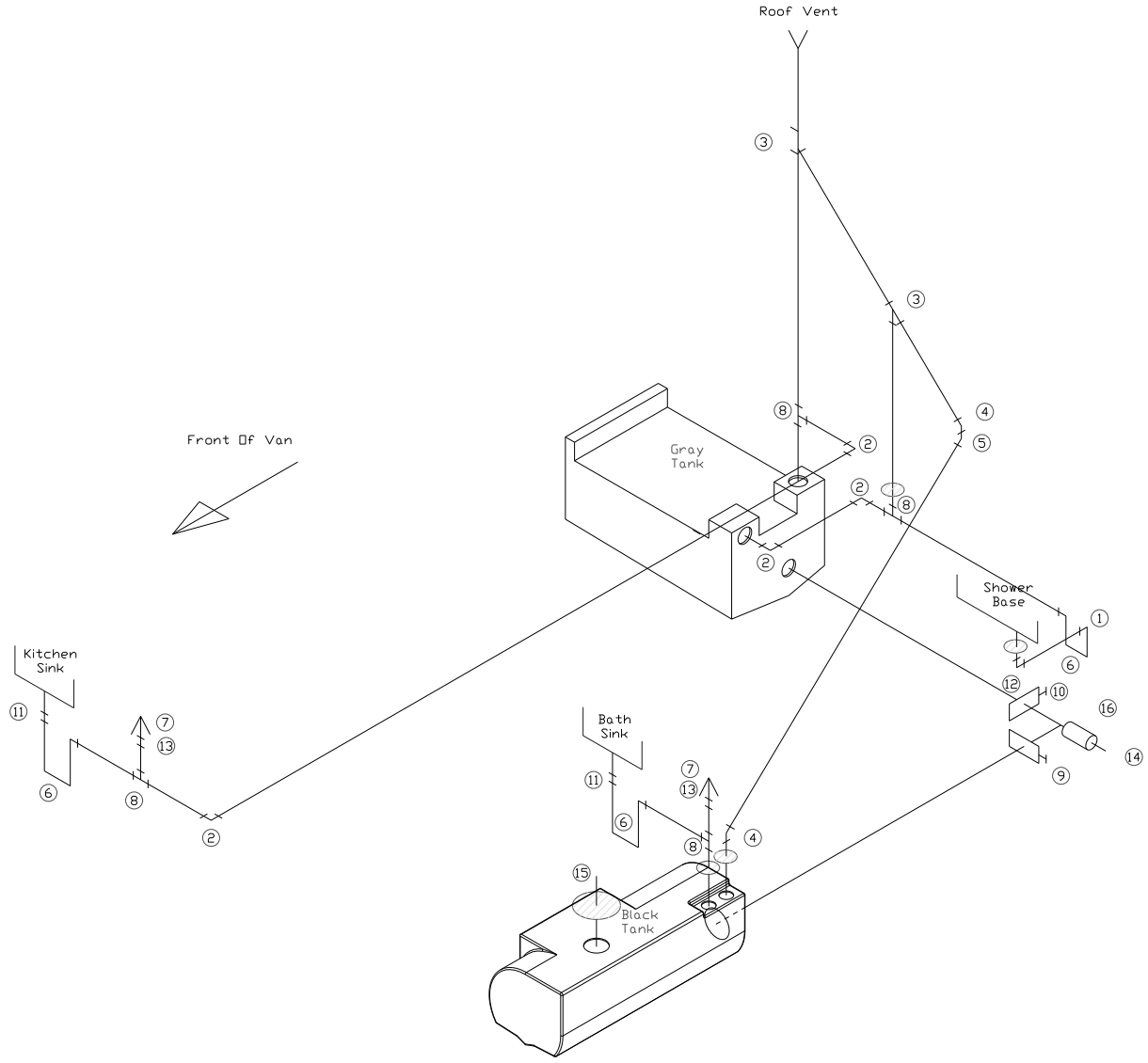


1 - 1 1/2” 90 Elbow HxH
2 - 1 1/2” 90 Elbow Long Sweep HxH
3 - 1 1/2” Wye HxHxH
4 - 1 1/2” 45” Elbow HxH
5 - 1 1/2” 45” Elbow HxS
6 - 1 1/2” P Trap HxH
7 - 1 1/2” Auto Plumbing Vent HPT
8 - 1 1/2” T Wye HxHxH
9 - 3” Termination Valve
10 - 1 1/2” Termination Valve
11 - 1 1/2” x 1 1/4” Male Trap Adapter
12 - 1 1/2” x 1 1/4” 90 Trap Adapter
13 - 1 1/2” Female Adapter HxFPT
14 - Drump Valve w/Cap and Strap
15 - 3” Toilet Flange
16 - Macerator Pump

***Fig. 7-16 Drain System***

## 7.5 PLUMBING SCHEMATIC FREEDOM II

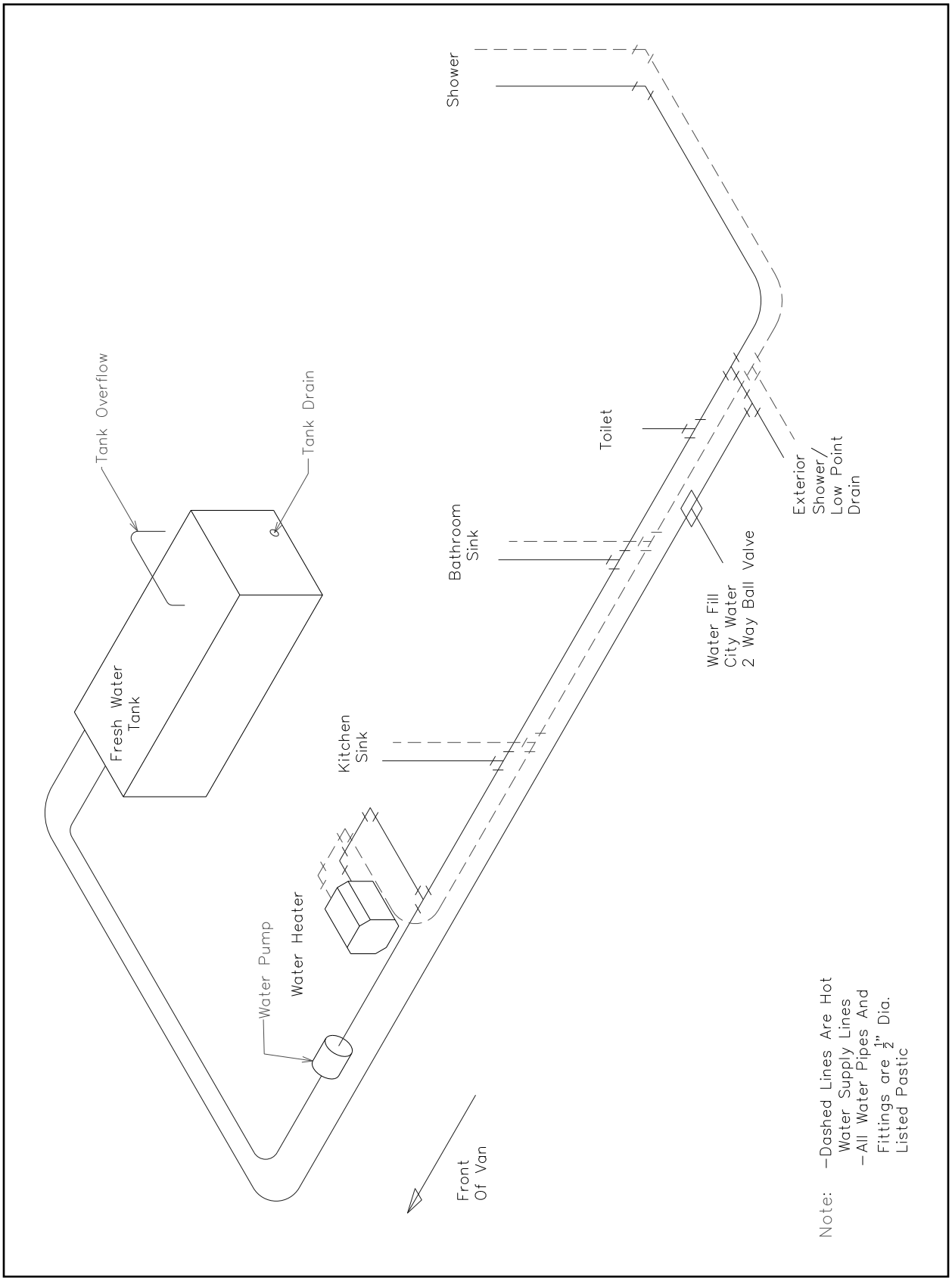


***Fig. 7-17 Water Supply System***

# 8. LIQUID PROPANE GAS SYSTEM

LP (Liquefied Petroleum) gas is a colorless gas compressed into liquid form for easy transportation and storage. It is the energy source for your range, oven, furnace, water heater, and an alternate source for your refrigerator.

It is an excellent fuel source and both safe and economical when used properly.

**CAUTION**

**These instructions are provided as a general guideline only and may not be complete. To ensure proper service and safety, always take your motorhome to an authorized LTV service center.**

## 8.1 LP VALVE CONTROL (UTILITY CENTER)

The valve control switch opens and closes the LP valve. If these is no 12 volt power in the van the LP valve with automatically close. *(Fig. 8-1)*

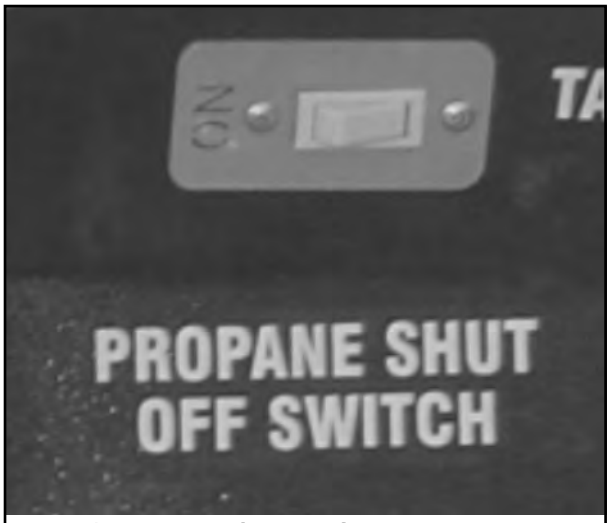


*Fig. 8-1 LP Valve Control Switch*

## 8.2 SAFE USE OF LP GAS

The LP gas system is designed and built to adhere to federal government and industry regulation requirements.

Many safety devices and backup systems have been built in to assure complete safety. Some of these include: tank overflow valves, LP gas detector, and carbon monoxide (CO) detectors. As well, LP gas contains an odor additive so that it can be more easily detected.

Observe the following precautions for the safe use of LP gas.

1. Familiarize yourself with the odor of LP gas. If you suspect a leak, turn off the LP gas supply immediately and determine the source of the leak with the help of qualified service personnel.
2. Do not tamper with any part of the LP gas system, piping or regulator. Service and maintenance should be performed only by qualified personnel.
3. **Do not use natural gas in a LP gas system.**
4. Check the entire system for leaks every time the tank is filled. Take time regularly to inspect the system for leaks.
5. Turn off the LP gas supply valve when not using it.
6. Tank should never be filled above the 80 % level. LP gas requires room to expand.
7. Make sure all appliance vents are open and free of obstruction when using the LP gas system.
8. When drilling holes in walls or attaching objects be careful not to damage any gas lines or electrical wiring.

## 8.3 SELECTING FUEL TYPES

Butane burns at a much higher temperature than propane but will not change from a liquid to a gas at temperatures below 32 degrees F or 0 degrees C. Propane, on the other hand, burns at a lower temperature and will continue to convert from a liquid to a gas at temperatures as low as -40 degrees F or -40 degrees C.

LP dealers will normally handle only the type of gas commonly used and suited to the climate in their area. If you travel from a warmer part of the country to a colder area you may want to check to make sure you have the right type of LP gas.

## 8.4 HOW LP GAS WORKS

There are two types of LP (Liquefied Petroleum) gas - propane and butane. Both are compressed into a liquid for easier transportation and storage. Common names used are tank gas, bottle gas or simply LP.

In the tank, LP is in the form of a liquid under very high pressure. As it is released, it changes to a vapor or gas and expands to a much greater volume.

Caution should be exercised when temperatures fall below -40 degrees C (-40 degrees F). You could be without propane at these lower temperatures.

## 8.5 LP TANK SYSTEM

The storage tank for the LP gas is mounted underneath the motorhome attached to the vehicle floor. It is accessible only from outside the vehicle. The tank valve is located near the top center of the tank next to the regulator. Before opening the supply valve, make sure all controls for the various appliances are in the OFF position. This is to prevent any LP gas from leaking into the motorhome. The supply valve is operated by the LP switch on the monitor panel. The valve is held open using 12 volt power. If the battery is dead or the battery disconnect is switched off the valve will automatically close.

The capacity of your propane tank is 8.3 Gal at 80% capacity.

## 8.6 REFILLING LP TANK

Simply open utility center cover, and fill the container via the fill valve as indicated on the utility center panel.

Shut off the control valve on the utility center panel via the rocker switch when filling the container and during travel. Always refill empty LP gas container as soon as possible.

Do not overfill your LP gas container. Stop filling when liquid appears at the overflow valve (B) (often called a 10% valve) which contacts the liquid level at 80% of container capacity allowing 20% for expansion.

Check after each filling by opening the overflow valve and bleed gas in well-ventilated area until white liquid stops. Overfilling may cause damage to regulator and cause malfunction of LP gas appliances.

**IMPORTANT**

**The LP tank has an automatic 80% stop-fill device to prevent over filling of the tank and it is also recommended to have the tank filled by an authorized filling station.**

The tank is permanently mounted to the motorhome floor. Therefore the vehicle must be taken to a fueling station to be filled. When the liquid LP gas appears at the overflow valve, the tank is full.

LP gas stations are found in all parts of the country. Check the Yellow pages in your telephone book if you have trouble finding a station. Look under “Gas-Liquefied Petroleum-Bottled and Bulk” or ”Propane”.

**WARNING**

**Do not smoke when refuelling. Keep flames, sparks and smoking material away from fuel or flammable fumes.**




*Fig. 8-2 LP Fill Valve*

**WARNING**

1. **Never overfill the LP gas tank. Make sure your vehicle is level when filling the tank.**
2. **Make sure all pilot lights are OFF before refuelling any of the gas tanks on your motorhome.**
3. **Do not smoke or have any open flame in the area where refuelling is taking place.**
4. **When testing for leaks in the LP system use a soap and water solution. Never use an open flame to test for leaks.**
5. **Never fill the LP tank when either the engine or the generator is running.**
6. **Keep all protective covers and caps in place.**

**WARNING**

**Remind the service attendant to use the 80% overflow valve when refuelling. Space must be left in the tank for vaporization and expansion.**

**Never carry LP or any other flammable liquid containers in your motorhome. Gases may inadvertently be discharged into the room which could result in fire or explosion.**

**After tank has been filled:**

1. Check all container and line connections periodically to be sure they are tight. When testing for leaks, use soapy water (never a match). LP gas has a distinct garlic odor.

2. If gasoline or LP gas fumes are noticed at any time, the cause should be determined and corrected without delay.

3. Before opening the control valve via the rocker switch on the monitor panel, check that controls for all gas appliances are in the off position. If this is not done, LP gas could accumulate inside the vehicle creating a fire or explosion hazard.

4. LP gas is also potentially lethal if inhaled.

## 8.7 AIR IN THE LP TANK

If your LP appliances burn poorly or do not stay lit even though you are sure you have plenty of fuel, you may have air trapped in the tank. The air will eventually escape along with the LP gas but it may be necessary that you have your tank purged of air by the LP gas dealer.

## 8.8 TRAVELLING LP GAS

In some jurisdictions it is illegal to transport LP gas on certain roads or through tunnels. Check state or provincial regulations to make sure your trip will not be halted or impeded unexpectedly as a result.

## 8.9 REGULATOR

The LP tank regulator has a plastic cover to protect it from the weather. This should never be removed except by qualified service personnel.

The pressure regulator has a vent hole on the underneath side. Make sure this vent hole is open and not obstructed in any way.

During freezing weather it may happen that a regulator may freeze up. This results from a small amount of moisture in the fuel even though every precaution is taken by gas dealers to prevent this from happening. To help avoid this situation, keep the control valve closed when not in use even when the tank is empty. This helps prevent condensation from forming. Hold a light bulb near the regulator to thaw it.

If moisture in the tank is a recurring problem, you may ask your LP gas dealer to inject a small amount of dry methyl alcohol into the tank to absorb the moisture.

Liquid Petroleum vaporizes quickly and easily at warmer temperatures. Under cold conditions this process slows down dramatically. When large amounts of fuel are required when using the furnace, for example, the fuel may not vaporize rapidly enough to keep all the appliances going at a high level. In this case you may have to reduce the consumption of fuel by lowering the temperature setting on the furnace, reduce the consumption of hot water, turn down the temperature setting on your refrigerator or switch from LP to electric where possible.

The regulator is preset. Do not attempt to adjust it. This should only be done by an authorized service outlet. The regulator should not be exposed to the elements.

If regulator fails: LP gas container may be overfilled, or there may be impurities in the propane. Regulator failure could cause LP gas components to malfunction.

**WARNING**

**Do not use an open flame or a heat lamp to thaw out regulator.**

## 8.10 LP GAS LEAKS

Notice the label placed near the range area. **(Do Not Remove Label).** If you ever smell LP gas in the vehicle or the detector alarm sounds, follow the instructions carefully.

1. Read, understand and follow safety sign:

**⚠ WARNING**

**IF YOU SMELL GAS**

1. **Extinguish any open flame, pilot lights and all smoking material.**
2. **Do not touch electrical switches.**
3. **Shut off the LP tank valve.**
4. **Open doors, windows and roof vents after making sure the power vent is switched off.**
5. **Leave the area until the odour is gone.**
6. **Have the system checked for leaks and make the necessary corrections and repairs.**

2. Use soapy water to check for leaks and watch for bubbles. Do not use an open flame.

3. Correct or repair leak(s) before using appliances or vehicle again.

**⚠ WARNING**

**Do not bring or store LP gas containers, gasoline, or other flammable liquids inside the vehicle because a fire or explosion may result.**

**⚠ WARNING**

**Do not use materials that contain AMMONIA or CHLORINE to check for leakage.**

## 8.11 ASPHYXIATION

1. Do not use portable fuel-burning equipment including wood and charcoal grills and stoves in the vehicle. The use of this equipment can generate deadly carbon monoxide gas or cause fires.

2. Provide proper ventilation when using the gas range to prevent asphyxiation. Do not use the range to heat the vehicle. Long term use of these appliances for space heating increases the chance of asphyxiation. Before using the range:

    a. Open overhead vent.

    b. Open window.

3. Avoid breathing the exhaust fumes from a gas or diesel engine and LP gas burner such as the vehicle or generator engines and the range, oven, refrigerator, furnace or water heater. Position the vehicle so the wind blows the engine exhaust fumes away. Provide ventilation to the inside of the vehicle for adequate air exchange when appliances or furnaces are being used to prevent a build-up of carbon monoxide. Be sure all alarms are working.

4. Do not run vehicle or auxiliary generator engine in a confined area such as a garage unless you are just moving it out of the area.

5. Use vent or air conditioning fan to force fresh air into the interior when vehicle is in an open area with the engine running for more than just a short time.

6. Maintain engine(s) exhaust system components in top condition to prevent fumes from entering vehicle. Check when changing oil, when exhaust sound changes or when underbody is damaged.

7. Close rear windows when driving to prevent drawing exhaust fumes into vehicle.

When the unit is new, some of the appliances will burn off some residue which has accumulated during production. You may also note some odors from cleaners which will dissipate with ventilation.

# 9. MOTORHOME MAINTENANCE

## 9.1 EXTERIOR CARE & MAINTENANCE

1. **Van Body:**
   The van body should be washed and polished using a high quality wax or polish. The running boards and rear section of the van is fiberglass, so extra care is needed in these areas.

2. **Underbody:**
   Mud and dirt along with corrosive materials used to control dust or ice on the roads can accumulate underneath your motorhome and cause premature deterioration and rusting. In addition, any build-up will add unnecessary weight to the vehicle. It is recommended that the undercarriage and the entire underbody be rinsed and flushed every time the motorhome is washed.

3. **Washing, Waxing and Polishing:**
   Damaging salts, calcium chloride, road tar, tree sap, insects and other foreign material have a way of accumulating on the body of your motorhome. To reduce the harmful effects of these agents it is recommended that the motorhome be washed frequently and thoroughly using a mild soap and warm water. Do not wash the exterior in direct sunlight and never use hot water. Pressure washers are not a good idea as they can loosen decals and sealants. Waxing your R.V. is strongly recommended to counter the effect of U.V. exposure on the exterior fiberglass parts.

   Carefully inspect all caulking around windows, doors, and vents as well as all other joints. Recaulk if necessary using the correct caulking material from your Leisure Travel Vans dealer.

   If you notice the water failing to bead on the motorhome it is probably time to wax and polish it. This will not only improve the appearance of your motorhome, but will protect the painted surfaces from oxidation and corrosion and make it easier to wash.

**CAUTION**

**Never use strong solvents or harsh abrasives on painted surfaces.**

4. **Stripes and Decals:**
   A few hints and precautions on care and maintenance:

   a. Wash with plain soap and warm water. Rinse thoroughly.

   b. Never wash with high-pressure washer at close range. The force of the water can lift the edges of the decals.

   c. Do not use solvents. They can smear the colors and damage the adhesive.

   d. Never use lacquer thinner or paint on decals.

   e. Avoid splashing gasoline or diesel fuel on decals and stripes. Rinse immediately if it happens.

5. **Exterior Lighting:**
   Before each trip, inspect all clearance lights, identification lights, marker lights, stop lights, turn signal lights and backup lights. Replace burned-out bulbs immediately. Keep all light lenses clean with soap and water.

## 9.2 INTERIOR CARE

Accumulations of dirt and dust not only detract from the appearance of the interior of your motorhome but will shorten the life of the carpets and fabrics. Weekly cleaning and vacuuming is recommended.

1. **Carpets:**
   See the manufacturer's carpet care guide on how to clean soil, dirt and stains from the carpet.

2. **Upholstery:**
   Care should be taken when cleaning upholstery materials in your motorhome. Do not use just any cleaner or spot remover. Regular vacuuming and wiping with clear water will take care of most stains. Any major cleaning problems should be undertaken by professional cleaners.

**IMPORTANT**
**Direct sunlight will cause fading of upholstery and fabrics. To minimize the effect, close drapes, blinds and shades whenever possible.**

3. **Spots and Stains:**
   Most spots and stains can be removed by using clear warm water. To keep the stain from spreading, start from the outside of the stain and work toward the center.

   Stains such as lipstick, grease, ink or mustard are very hard to remove and will probably require some professional advice or help.

4. **Vinyl Fabrics:**
   Vinyl should be cleaned with a soft, damp cloth using a mild detergent. Never use solvents of any kind on vinyl surfaces.

   *Vinyl Manufacturer's Recommendations: To clean most common household stains use warm, soapy water and a clear water rinse. For more stubborn stains FantastikTM or Mr. CleanTM diluted 3:1 with water are recommended.*

5. **Draperies, Curtains and Bedspreads:**
   These are made from a variety of fabrics and will require the help of professional cleaners. It should be noted that most materials will probably shrink by about five percent even when cleaned professionally.

6. **Cabinetry:**
   Only the finest wood products have been used in the construction of your motorhome. To clean, use a soft cloth and a high quality wood finish cleaning product available from your RV center.

   The beauty of the wood is in the natural variations in grain and density causing some differences in color and shading.

7. **Walls:**
   As a rule, walls can be cleaned easily using warm water and a mild soap. For easier cleaning of accumulated grime, a bit of rubbing alcohol may be added to the water. Never use solvents or abrasives.

8. **Tables and Countertops:**
   The plastic laminate on work surfaces will resist solvents, stains and abrasions. A coat of furniture wax will help preserve their beauty and make cleaning easier.

9. **Sinks:**
   The sinks can be cleaned with warm water and soap. Wipe dry to avoid streaks. For stubborn stains, a mild abrasive may be necessary. Always work in the direction of the polish lines.

10. **Refrigerator:**
    The cabinet interior should be cleaned regularly. Remove shelves and wash the lining with lukewarm water to which a mild soap may be added. Dry thoroughly, especially around door frame and door gasket. Warm water only should be used to wash the cooling evaporator, ice trays and shelves. Never use strong chemicals or abrasive cleaning materials on any part of the cabinet. See manufacturer's information.

**CAUTION**

**Use of water-based and detergent-based solvent cleaners may cause excessive shrinking. Water stains may become permanent and unable to be removed with solvent cleaning agents.**

11. **Range:**
    a. **General:**
    Regular cleaning with a warm detergent solution and soft cloth will keep your range looking bright and new. This should be done as soon as range cools.

    b. **Top Burners:**
    Top burners (caps and grates) may be cleaned with a detergent solution. If any burner port should become clogged, clean with a toothpick. Never use pins or other metal objects to clean the ports, as they may become enlarged. If the burner is washed in a sink, dry immediately by shaking off all excess water and lighting the burner until all water has evaporated.

    c. **Removing Stovetop:**
    1.) Remove the 2 thumbscrews from the sides of the stovetop. Lift the stovetop clear of the burner box.

    2.) To reinstall top reverse this procedure.

12. **Microwave Oven:**
    Consult owners manuals for detailed instructions. Keep the door and inside of your microwave oven clean. No grease, soil or spatter should be allowed to build up. A build up of soil will absorb microwave energy, just the same as the food you are cooking and may increase the cooking time.

    a. When food spatters or spilled liquids adhere to walls, wipe with a damp cloth. Mild detergents may be used if the oven gets very dirty. The use of harsh detergents or abrasives is not recommended.

    b. The outside oven surface should be cleaned with soap and water, rinsed and dried with a soft cloth. To prevent damage to the operating parts inside the oven, water should not be allowed to seep into the ventilation openings.

    c. If the control panel becomes wet, clean with a soft, dry cloth. Do not use harsh detergents or abrasives on control panel. When cleaning the control panel, leave the oven door open to prevent oven from accidentally turning on. After cleaning touch cancel pad to clear display window.

    d. It is necessary to remove the glass tray for cleaning. Wash the tray in warm sudsy water or in a dishwasher.

13. **Bathroom:**
    a. **General:**
    As a general rule, use warm water and mild soap to clean walls and surfaces in your bathroom. On mirrors a good quality glass cleaner may be used. Harsh cleaners, detergents or abrasives should never be used.

    b. **Toilet:**
    For instructions on the care of the toilet, refer to the toilet manufacturer's manual.

14. **Doors and Windows:**
    Door locks and hinges should be lubricated periodically with powdered graphite to keep them operating easily and to protect against freeze-up.

    Windows should be cleaned using a good glass cleaner. When cleaning ice from windows always use a plastic scraper and avoid damaging the seals and sealant along the edge of the windows.

# 10. STORAGE & WINTERIZATION

All systems, components and appliances should be inspected and repaired prior to storage.

## 10.1 STORAGE CHECKLIST

1. Fill fuel tanks to reduce excessive build-up of moisture in the fuel tanks.
2. Check coolant level and add anti-freeze if required, to protect to the lowest expected temperature during storage.
3. Change engine oil to the recommended viscosity to aid cold weather starting.
4. Park motorhome as level as possible, end to end and side to side.
5. Ensure that battery has a full charge, then disconnect both the main and auxiliary batteries via the battery disconnect switch. Charge monthly.
6. Wash motorhome. If exposed to road salts, the exterior and underside should be thoroughly washed and flushed.
7. Remove all perishables and anything which may freeze (canned goods, medicine, etc.). Leave the refrigerator door open. Be sure controls are turned off.
8. To ventilate living area, open drawers, cabinets, closets, etc..
9. Drain the holding tanks, toilet and living area water system. Deodorize and allow to dry. Turn off the water heater. Drain fresh water tank and water heater. Winterize (to store) water system as detailed in Water System Winterization on page 17-2.
10. Turn off LP gas tank valve.
11. Make sure furnace manual valve and thermostat are set at off, range burners at off, fridge at off.
12. Add RV anti-freeze (1/2 cup each) to the kitchen, bathroom and shower drain.
13. Check engine transmission and motor generator (if equipped) for evidence of oil leaks.
14. Before moving, run engine at least two minutes with the transmission selector in park position.

## 10.2 COLD TEMPERATURE STORAGE

### 10.2.1 WATER SYSTEM WINTERIZATION

1. Drain fresh water via the drain cap at the tank and low point drains, see page 7-2.
2. Drain the water heater by removing the anode. Open the relief valve on the water heater to drain faster.
3. Turn hot water tank bypass valve to the bypass position, see page 7-7.
4. Attach the blow out plug to the fresh water hook-up on the exterior of the unit.
5. Blow compressed air into the blow-out plug.
6. Run pump for about 1 minute.
7. Open the exterior shower cold tap until the water stops coming out. Close the tap to re-build the air pressure. Then open the tap again. Repeat this process untill no more water comes out.
8. Repeat step 6 for all taps hot and cold.
9. With the air still on flush the tiolet until the water stops flowing. Re-build pressure and repeat.
10. Drain grey and black water tanks.
11. Add about 1 cup of potable anti-freece into each drain. Do not forget the shower drain.
12. Replace the drain caps.

**⚠ WARNING**

**Do not use automotive coolant anti-freeze. It is toxic and will contaminate the water system.**

### 10.2.2 DE-WINTERIZE WATER SYSTEMS

1. Fill the water tank with clean water.
2. Turn the bypass kit to the normal position.
3. Turn on the pump.
4. Open the water faucet furthest away from the water tank. Run the water until clear water appears. Shut off the faucet, and do this to all faucets, and shower head.
5. Open the hot water line until water appears.

**CAUTION**

**Do not turn the water heater bypass valve to the normal position until clear water appears at all faucets.**

### 10.2.3 SPRING STARTUP

Following a storage period, reactivate your Leisure Travel Motor Home by hooking up the water pump. Pressurize the water system and make sure it is not leaking. A visual check is all that is needed (watch it for 15 minutes).

Clean all your appliances and get the propane line purged by a reputable dealer. Make certain everything in the motor home works properly. Consult the Chrysler Owners Manual for any chassis maintenance recommendations. Now you are ready to hit the road.

## 10.3 COLD TEMPERATURE OPERATION

All Leisure Travel Vans are built for three season travel including:

1. Urethane installation undercoating.
2. Insulated holding tank compartment.
3. All plumbing located in heated interior spaces.

Although your motorhome is designed to withstand winter temperatures, we cannot guarantee the vehicle not to freeze. Certain precautions should be taken in preparing for sub-zero temperature travelling.

Do not use the fresh water system in cold weather temperatures. Use only a carry-on water supply in these conditions.

### 10.3.1 CHASSIS

Check coolant level and add anti-freeze, if required, to protect against lowest expected temperature. Change engine oil to the recommended viscosity to aid cold weather starting. See the manufacturer's manual for further recommendations.

### 10.3.2 LP GAS

When travelling in winter, propane is recommended as it will vaporize in extreme cold (above -42 C). Butane is not recommended due to its high vaporization temperature (0°C). Use of butane in cold temperatures may block the system and cause components to malfunction. Add approximately .25 liters of methyl alcohol to your LP gas container to prevent freeze-up.

### 10.3.3 WASTE SYSTEM

To prevent winter freeze-up, add regular RV anti-freeze through the toilet and kitchen drains, directly into the holding tanks. Be sure to add sufficient amounts in order to protect the total volume of the holding tank.

Do not use alcohol-based anti-freeze or other petroleum products.

# 11. INDEX


PAGE

## A

Air in the LP Tank ....8-3
Air Ride System (Ride Rite)....3-4
Alarms ....2-2
Antenna Operation ....4-7
Appliances and Equipment....4-1
Asphyxiation ....8-4
Automatic Power Transfer Switch....6-5
Automotive Battery ....6-5
Auxiliary Battery....6-5
Auxiliary Generator....6-4
Awning Operation ....5-1
Auxiliary Battery ....6-5

## B

Backup Camera/Monitor....3-13
Basement Storage....3-2
Black Water - Waste Tank ....7-4

## C

Cable TV Hookup ....4-7
Carbon Monoxide Alarm....2-3
Coffee Maker....4-3
Cold Temperature Operation ....10-1
Cold Temperature Storage ....10-1
Converter....6-2

## D

De-Winterize Water Systems ....10-2
Dinnette ....3-5
Disinfection of Water Tank....7-3
Do's and Don'ts - Holding Tanks ....7-5
Driving Characteristics....3-11
Driving Safety Tips....3-11
Dumping Holding Tanks....7-4
DVD Player....4-8

## E

Electrical Schematic Freedom II (110 volt bed)....6-8
Electrical Schematic Freedom II (12 volt bed)....6-9
Electrical Schematic Freedom II (110 volt sofa) ....6-10
Electrical Schematic Freedom II (12 volt sofa) ....6-11
Electrical Systems ....6-1
Electric Rear Sofa....3-6
Electric Side Entry Step....4-3
Emergencies While Driving ....3-14
Emergency Equipment Checklist....3-4
Emergency Escape ....2-4

PAGE

Extended Use....3-13
Exterior Care ....9-1
Exterior Feature Identification....1-5
Exterior Refrigerator Compartment ....4-2
Exterior Shower....7-9
External Power Cord ....6-2
External Water Supply....7-1

## F

Fog Lights....2-2
Fire Prevention ....2-4
Fire Safety Tips....2-4
Fire Extinguisher....2-4
Fresh Water System....7-1
Fresh Water System Drain ....7-2
Fresh Water Tank Filling....7-2
Fresh Water Toilet....7-8

## G

General Safety....2-1
Generator ....6-4
Grey Water - Waste Tank ....7-4
Ground Fault Circuit Interrupter....6-3

## H

Hazard Warning Lights ....3-14
Holding Tank Level Indicators....7-5

## I

Identification Information ....1-3
Information Kit ....1-1
Interior Care....9-2
Interior Shower ....7-9
Introduction....1-1

## L

Lighting Burners ....4-2
Liquid Propane Gas System....8-1
Low Point Drains ....7-2
LP Control Valve Switch ....8-1
LP Gas Alarm ....2-2
LP Gas Furnace ....4-4
LP Gas Leaks....8-4
LP Tank Refilling....8-2
LP Tank System....8-2

# 11. INDEX


**PAGE** **PAGE**

**M**

Maximum Occupancy ..... 3-4
Microwave Oven ..... 4-3
Motorhome Maintenance ..... 9-1

**O**

Operator's Manuals ..... 1-1
Optional Power Seats ..... 3-9
Overheating ..... 3-12

**P**

Parking ..... 3-13
Plumbing System Schematic Freedom II ..... 7-10
Plumbing System Schematic Freedom II ..... 7-11
Power Roof Vent ..... 4-6
Pre-Trip Inspection ..... 3-3

**R**

Radio 12-volt Power Diverter Switch ..... 4-8
Range ..... 4-2
Refrigerator ..... 4-1
Reporting Safety Defects ..... 1-6
Roof Air Conditioner w/ Heat Strip ..... 4-5

**S**

Safe Use of LP Gas ..... 8-1
Seat/Shoulder Belts ..... 3-7
Seat Swivels ..... 3-8
Selecting Fuel Types ..... 8-1
Service Assistance ..... 1-6
Severe Weather Information ..... 3-13
Smoke Alarm ..... 2-3
Spare Tire Carrier ..... 3-14
Spring Startup ..... 10-2
Storage & Winterization ..... 10-1
Storage Checklist ..... 10-1
System Monitor ..... 6-1

**T**

Towing ..... 3-2
Travelling ..... 3-11
Travel Tips ..... 3-12
TV ..... 4-8

**V**

Vehicle Certification Label ..... 1-3
Vehicle Loading ..... 3-1
Vehicle Operation ..... 3-1
Vehicle Preparation ..... 3-1

**W**

Waste Systems ..... 7-4
Water/Plumbing System ..... 7-1
Water Fixtures ..... 7-8
Water Heater ..... 7-6
Water Heater Bypass ..... 7-7
Water Pump ..... 7-2
Water Pump Initial Startup ..... 7-3
Water Pump Switch ..... 7-2
Water Pump Troubleshooting ..... 7-3
Water System Winterization ..... 10-1

**#**

120-Volt AC System ..... 6-2
120-Volt Circuit Breakers ..... 6-3
12-Volt DC System ..... 6-5
12-Volt Coach Fuses ..... 6-7
12-Volt Chassis Fuses ..... 6-7

# APPENDIX A: COMPONENT SUPPLIERS

Should you encounter problems with any of the installed components in your unit, and are unable to contact Leisure Travel Vans, or an authorized dealer, locate the component on this list and contact the manufacturer directly for assistance.

| COMPONENT | SUPPLIER | LOCATION | PHONE | WEBSITE |
|---|---|---|---|---|
| Air Conditioner | Carrier Transport | York, PA | 800 450 2211 | www.carrier.com |
| Air Conditioner (US) | Dometic | | 800 544 4881 | |
| Air Conditioner (Can) | Dometic | | 519 653 4390 | |
| Air Ride System (Ride Rite) | Firestone Ind. Products | Carmel. IN | 800 428 4442 | |
| Awning | Fiamma | Orlando, FL | 407 672 0091 | www.fiamma.com |
| Backup Camera | Audiovox Specialized Applications | Chicago, IL | 800 688 3135 | www.asaelectrontics.com |
| Bathroom Vent | Ventline | Elkhart, IN | 574 848 4491 | |
| Battery - Auxillary (Rear) | Interstate | | 888 772 3600 | www.interstatebatteries.com |
| Breaker Panel - electrical | MagneTek | Goodland, IN | 219 297 3111 | www.toddengineering.com |
| Coffee Maker (Can) | Black & Decker Can. | | 800 231 9786 | www.black&decker.com |
| CO Gas Detector | MTI Industries | Wauconda, IL | 800 383 0269 | www.safe-t-alert.com |
| Decals/Graphics | Spectra/Trimline | Simco, ON | 519 426 5722 | www.pawnson.com |
| Electrical Panel | Parallax Power Components | Goodland, IN | 574 297 3111 | |
| Fibreglass | Permacare | Altona, MB | 204 324 5510 | n/a |
| Furnace (Can) | G L Products/Greglund | Oakville, ON | 905 845 7558 | n/a |
| Furnace (US) | Suburban Mfg. | Dayton, TN | 423 775 2131 | www.rvcomfort.com |
| Generator (Can) | Cummins Mid-Canada | | 800 888 6626 | www.cummins.com |
| Generator (US) | Onan Corp. | | 800 888 6626 | www.funroads.com |
| LP Gas Detector | MTI Industries | Wauconda, IL | 800 383 0269 | www.safe-t-alert.com |
| LP Gas Tank (US) | Manchester Tank | Brentwood, TN | 800 877 8265 | www.mantank.com |
| Macerator Pump | RV SaniCon/Thetford Sanitation | Mississauga, ON | 905 671 0255 | www.thetford,com |
| Microwave (Can) | Dometic | | 519 653 4390 | |
| Microwave (US) | Dometic | | 800 544 4881 | |
| Microwave Convection | Tri Star Distribution | Elkhart, IN | 574 294 2684 | www.tristardistributing.com |
| Monitor Panel | KIB Enterprizes | Elkhart, IN | 219 293 8166 | www.kibenterprises.co |
| Power Seat | Flexsteel Industries | Dubuque, IA | 563 556 7730 | |
| Radio/DVD Player | Audiovox Specialized Applications | Chicago, IL | 800 688 3135 | www.asaelectrontics.com |
| Refrigerator (US) | Dometic | | 800 544 4881 | |
| Refrigerator (Can) | Dometic | | 519 653 4390 | |
| Regulator | Fairview Fittings | Winnipeg, MB | 204 633 9304 | www.fairviewfittings.com |
| Roof Vent | Fantastic Vent | Capac, MI | 800 521 0298 | www.fantasticvent.com |
| Speakers | Audiovox Specialized Applications | Chicago, IL | 800 688 3135 | www.asaelectrontics.com |
| Stove & Top | Dometic US | | 519 653 4390 | |
| Toilet (Can) | Thetford Sanitation | Mississauga, ON | 888-215-5140 | www.thetford.com |
| Toilet (US) | Thetford, Corp | Ann Arbor, MI | 800 521 3032 | www.thetford.com |
| TV | Audiovox Specialized Applications | Chicago, IL | 800 688 3135 | www.asaelectrontics.com |
| Water Pump (Can) | Shurflo (J&J Sales) | Langley, BC | 604 534 6336 | n/a |
| Water Pump (US) | Shurflo | Santa Anna, CA | 800 8543218 | www.shurflo.com |
| Water Heater (Can) | GL Products/Greglund | Oakville, ON | 905 845 7558 | n/a |
| Water Heater (US) | Suburban Mfg. | Dayton, TN | 423 775 2131 | www.rvcomfort.com |
| Winegard Antenna (Can) | McEown Instrument Service | Richmond Hill, ON | 800 288 8094 | www.winegard.com |
| Winegard Antenna (US) | Winegard Company | Burlington, IA | 319 754 0600 | www.winegard.com |

# NOTES

# NOTES




By **Triple E Recreational Vehicles**

Printed NOVEMBER 2010